DX AMMONIA PIPING HANDBOOK

COLMAC COIL Manufacturing Inc.

DX AMMONIA PIPING HANDBOOK

4TH EDITION

Bruce I. Nelson, P.E.

DX AMMONIA PIPING HANDBOOK
4th Edition

Bruce I. Nelson, P.E.

TABLE OF CONTENTS

	Page
Background	2
Patents	4
System Configuration	4
System Stability	11
Evaporator Selection and Operation	13
DT1 vs DTM Ratings	13
Sensible Heat Ratio, Room rh%, and Evaporator Ratings	14
Optimizing System TD	15
Effect of TD on Expansion Valve Operation	21
Effect of Frost on Evaporator Performance	22
Condenser Selection and Operation	23
Subcooling	24
Piping – General	27
Liquid Lines	27
Suction Lines	28
Hot Gas Lines	29
Effects of Water in Ammonia and Its Removal	30
Separation	33
Distillation and Disposal of Ammonium Hydroxide	33
Liquid Transfer	37
Effects of Oil on Evaporator Performance and Oil Separation	40
Estimating DX Evaporator Refrigerant Charge Inventory	44
Optimizing Hot Gas Defrost	45
Calculating the Cost of Defrost	46
Defrost Water Volume and Drain Line Sizing	47
References	51
APPENDIX A – DX Ammonia P&ID	53
Figure A1 – Single Stage Single (or Multiple) Temperatures	
Figure A2 – Single Stage Multiple Temperatures	
Figure A3 – Single Stage Low Temp	
Figure A4 – Single Stage Glycol Med Temp / DX Low Temp	
Figure A5 - Two Stage (Screw Compressors) with Intercooling	
Figure A6 - Two Stage (Recip Compressors) with Intercooling	

© 2016 Colmac Coil Manufacturing Inc.

I. Background

Ammonia refrigeration systems have traditionally employed evaporators supplied with liquid by either gravity flooding (with surge drums), or pumped overfeed (either with mechanical pumps or discharge gas-driven vessels). Both of these designs typically use bottom feed coil circuiting which feeds liquid ammonia at the lowest point in the coil circuit and causes the ammonia to flow upward and "percolate" through the coil in ascending passes to the outlet at the top of the circuit. These coil designs also typically use large diameter tubing which means relatively large coil internal volume. This combination of refrigerant feed, circuiting, and tube diameter, results in the greatest evaporator charge inventory possible.

End users of ammonia refrigeration systems are increasingly interested in reducing the charge of ammonia in evaporators (and in the overall system) in the interest of minimizing the risk to workers and products associated with ammonia leaks. One very effective way to significantly reduce evaporator ammonia charge is to design and operate the evaporator using dry expansion (DX) circuiting and controls. Using DX ammonia can reduce the evaporator charge by as much as 30 to 50 times compared to bottom feed flooded or pumped designs. The magnitude of this reduction in ammonia charge may also mitigate regulatory requirements (PSM, RMP), and potentially reduce insurance risk and premiums.

DX ammonia has been used for some time in medium and high temperature systems (suction temperatures above +20 degrees F) with some success. However, in spite of the charge reduction advantages mentioned above, to date DX ammonia has not been applied successfully at freezer temperatures. At suction temperatures below about +20F, the following particular characteristics of ammonia result in extremely poor performance of evaporators unless addressed and mitigated:

1. <u>Separation of liquid and vapor phases</u>. The very high ratio of vapor to liquid specific volume of ammonia at low temperatures combined with its very high latent heat of vaporization causes an unavoidable separation of vapor and liquid phases inside evaporator tubes. This separation of phases causes the liquid ammonia present to run along the very bottom of the tubes leaving the top of the tubes completely "dry". The result is extremely poor evaporator performance and lower-than-expected suction temperatures during operation. To solve this problem Colmac has developed (and patented) an enhancement technique, which when applied to the inside of evaporator tubes, causes the liquid ammonia present to coat the entire inside surface of the tubes by capillary action. Performance with Colmac enhanced tube technology results in good DX ammonia performance even at low temperatures, which heretofore has not been possible.
2. <u>Refrigerant distributor technology</u>. Traditionally the distribution of expanded refrigerant to multiple parallel evaporator circuits has been done using a refrigerant distributor having a fixed orifice plate. This design depends on a relatively large pressure drop (approximately 40-45 psi) across the fixed orifice to thoroughly mix and equally distribute the liquid and vapor phases before they enter the distributor tubes and evaporator circuits. This relatively high pressure drop across the distributor reduces the

© 2016 Colmac Coil Manufacturing Inc.

pressure drop available for the expansion valve, and consequently limits how low condensing pressure can be allowed to fall during periods of low ambient temperature. The very high latent heat of vaporization of ammonia results in low refrigerant mass flow rate and consequently a very small orifice diameter for a given cooling load (the orifice can be as small as 1/16" diameter in some cases). This small orifice size is prone to fouling and being blocked by even small size debris. Other disadvantages of this distributor design include:

a. Performance is very sensitive to liquid temperature (subcooling) at the expansion valve.
b. Operating range is small, at most 50% to 125% of rated capacity.
c. The orifice and distributor tubes may restrict the flow of hot gas during a hot gas defrost cycle if the distributor is used for distribution of the hot gas.
d. The maximum number of parallel evaporator circuits available in a single distributor is limited to only 15.

To address these shortcomings Colmac has developed and patented a new refrigerant distributor technology, the Colmac Tank Distributor, having the following characteristics:

a. Refrigerant pressure drop across the Tank Distributor during operation is very low, only 2-4 psi.
b. Any oil or debris entering the Tank Distributor is captured in a drop leg (which is integral to the design) before it can enter the coil and foul tube surfaces.
c. Performance of the Tank Distributor is completely insensitive to liquid temperature (subcooling).
d. Graduated orifices in each distributor tube allow equal distribution of refrigerant to all circuits over an extremely wide operating range of 0% to 700% of rated capacity.
e. Graduated orifices and large diameter distributor tubes allow full flow (minimal restriction) of hot gas during hot gas defrost.
f. The number of parallel evaporator circuits possible in a single Tank Distributor can be as high as 48.

3. Removal of water from ammonia. As described elsewhere (Nelson 2010), even small amounts of water (1-3%) in the ammonia will significantly penalize DX ammonia evaporator performance. This very negative effect of small amounts of water on evaporator performance has not been fully recognized in the past, but must be addressed during the design of the DX ammonia system. Water must be effectively removed during operation, particularly in freezing systems which operate at suction pressures below one atmosphere (in a vacuum). Proper design and arrangement of accumulator vessel(s) and defrost condensate return piping will result in continuous removal and isolation of water-laden ammonia from the system and is described in this Handbook.

© 2016 Colmac Coil Manufacturing Inc.

Colmac has developed, tested, and patented (Nelson 2011) a new Low Temperature DX Ammonia system which correctly addresses all of the above issues peculiar to ammonia as a refrigerant that have heretofore prevented its use at low suction temperatures. It is now possible to successfully apply DX ammonia at suction temperatures down to -50 degrees F. This Piping Handbook is intended to guide the reader through the process of successfully designing and implementing DX Ammonia from +50F to -50F and realizing the benefits of:

- Dramatically reduced ammonia charge
- Simplified controls
- Energy efficient dry suction line
- Reduced line sizes
- Elimination of ammonia recirculator pumps

II. Patents

The Colmac Advanced DX Ammonia system and evaporator technology described in this Piping Handbook are covered by one or more of the following US Patents:

6,843,509
7,597,137
7,958,738
8,474,276
8,783,057

III. System Configuration

Colmac Advanced DX Ammonia can be applied to any temperature level and system configuration. P&ID diagrams for various typical systems are shown in Appendix A, simplified for purposes of clarity. Selection and system piping details (relief valves, purgers, isolation valves, vessel designs, etc) should follow industry guidelines as found in the IIAR Ammonia Piping Handbook (IIAR 2004). The diagrams are not intended to present an exhaustive range of configurations – every industrial refrigeration system will have unique features and requirements. This information is presented to illustrate the general system features particular to a successful DX Ammonia design. Note that it is always good practice to install an air purger on any industrial ammonia system. For the sake of simplicity air purgers are not shown in these P&IDs. The reader is referred to the purger manufacturer for proper piping, installation, and operation of their equipment.

1. Single Stage with Single or Multiple Temperature Levels - Figure A1

   This system is very simple with only a single compressor suction pressure level and a single suction accumulator vessel. Evaporators can be operated at multiple temperatures by using back pressure regulating valves (BPRV) for the higher temperature level(s). Depending on how much of the load is at the higher temperature level(s), this system can be very energy inefficient. A typical application for this P&ID

© 2016 Colmac Coil Manufacturing Inc.

would be a fruit and/or vegetable storage facility. Expected charge for this type of system is in the range of 6.5 to 7 lbs of ammonia per ton of refrigeration.

Important features in Figure A1 required for proper DX ammonia operation include:

a. Defrost condensate from hot gas defrosting units is returned to the suction accumulator. This effectively captures any water in the ammonia in this vessel where it will be distilled over time and can then be removed from the system.
b. Defrost condensate returning from hot gas defrosting units is utilized in the flooded plate heat exchanger to subcool the high pressure liquid. When there is insufficient condensate to keep the subcooler flooded, makeup liquid is added via a makeup line to maintain a liquid level in the accumulator sufficient to achieve the required amount of subcooling. Conversely, the heat generated by subcooling must equal or exceed the amount of heat needed to vaporize all of the defrost condensate returning from hot gas defrosting evaporators. This will be the case provided the number of defrosts per day does not exceed around (6) x 10 minutes each (hot gas on time) assuming a room temperature of 32 deg F. If the frost load is high enough to require more than (6) x defrosts per day, then the subcooling load will not be high enough to vaporize all the defrost condensate and a liquid transfer system must be added to transfer the excess liquid refrigerant from the suction accumulator back to the high pressure receiver.
c. The liquid line pressure is nominally reduced by a pressure reducing valve (PRV) downstream of the subcooler heat exchanger. The purpose of the PRV is to stabilize the liquid line pressure which improves the operation of expansion valves (reduces the potential for hunting).
d. Any oil leaving the oil separator as vapor will be condensed back to liquid in the condenser and settle to the bottom of the high pressure receiver. The liquid supply to the liquid line should be taken from a point 2-3" up from the bottom of the receiver vessel on the end opposite the connection coming from the outlet of the condenser. This will result in a process of secondary oil separation in the pool of high pressure liquid in the receiver and will significantly reduce the amount of oil circulated to the evaporators.
e. When liquid injection oil cooling is used as shown in this P&ID, liquid for oil cooling should be taken from a drop leg located between the inlet connection (coming from the condenser outlet) and outlet connection (to the liquid line). The drop leg gives priority liquid to the compressors for cooling and also returns any accumulated oil.
f. Hot gas for defrosting is taken from the top of the high pressure receiver to minimize the amount of oil sent to the evaporators in the hot gas. Forcing the hot gas to pass through the receiver vessel serves to desuperheat and "de-oil" the gas prior to entering the hot gas line.
g. A pressure reducing valve (PRV) can be installed in the hot gas line to manage the pressure and flow of hot gas for defrosting adding to system stability.

© 2016 Colmac Coil Manufacturing Inc.

2. Single Stage Economized Screw w/ Multiple Temperatures (Te > -20 deg F) - Figure A2

   This system configuration is widely used in cold storage warehouses due to its cost effectiveness, simplicity, and flexibility. Recent developments with liquid injection oil cooling of screw compressors as shown in this P&ID have significantly reduced the energy penalty traditionally associated with this oil cooling method. This P&ID is intended for systems which have the low side operating at positive pressures. If the low side pressure is less than about 4 - 5 psig then an oil pot must be added to the low temperature accumulator to safely drain oil. Expected charge for this type of system is in the range of 6.5 to 7 lbs of ammonia per ton of refrigeration.

   Important features in Figure A2 required for proper DX ammonia operation include:

   a. Defrost condensate from hot gas defrosting units is returned to the high pressure suction accumulator. This effectively captures any water in the ammonia in this vessel where it will be distilled over time and then removed from the system.
   b. Defrost condensate returning from hot gas defrosting units is utilized in the flooded plate heat exchanger to subcool the high pressure liquid. When there is insufficient condensate to keep the subcooler flooded, makeup liquid is added via a makeup line to maintain a liquid level in the accumulator sufficient to achieve the required amount of subcooling. Conversely, the heat generated by subcooling must equal or exceed the amount of heat needed to vaporize all of the defrost condensate returning from hot gas defrosting evaporators. This will be the case provided the number of defrosts per day does not exceed around (6) x 10 minute (hot gas on time) defrosts in 32 deg F rooms and (2) x 15 minute (hot gas on time) defrosts in -10 to -20 deg F rooms. If the frost load is high enough to require more defrosts per day than this, then the subcooling load may not be high enough to vaporize all the defrost condensate and a liquid transfer system should be added to transfer the excess liquid refrigerant from the suction accumulator back to the high pressure receiver (see Figure A3).
   c. An electric heater is shown in the drop leg of the low pressure suction accumulator to heat any oil that may have accumulated. If the low side pressure is less than about 4 - 5 psig then an oil pot must be added to the low temperature accumulator to safely drain oil.
   d. The liquid line pressure is nominally reduced by a pressure reducing valve (PRV) downstream of the subcooler heat exchanger. The purpose of the PRV is to stabilize the liquid line pressure which improves the operation of expansion valves (reduces the potential for hunting).
   e. Any oil leaving the oil separator as vapor will be condensed back to liquid in the condenser and settle to the bottom of the high pressure receiver. The liquid supply to the liquid line should be taken from a point 2-3" up from the bottom of the receiver vessel on the end opposite the connection coming from the outlet of the condenser. This will result in a process of secondary oil separation in the pool of high pressure liquid in the receiver and will significantly reduce the amount of oil circulated to the evaporators.

© 2016 Colmac Coil Manufacturing Inc.

f. When liquid injection oil cooling is used as shown in this P&ID, liquid for oil cooling should be taken from a drop leg located between the inlet connection (coming from the condenser outlet) and outlet connection (to the liquid line). The drop leg gives priority liquid to the compressors for cooling and also returns any accumulated oil.
g. Hot gas for defrosting is taken from the top of the high pressure receiver to minimize the amount of oil sent to the evaporators in the hot gas. Forcing the hot gas to pass through the receiver vessel serves to desuperheat and "de-oil" the gas prior to entering the hot gas line.
h. A pressure reducing valve (PRV) can be installed in the hot gas line to manage the pressure and flow of hot gas for defrosting adding to system stability.

3. Single Stage Economized Screw w/ Multiple Temperatures - Figure A3

This system configuration is similar to Figure A2 in that it shows an economized screw compressor system with multiple temperature levels typical of a freezer cold storage facility. Here, however, a transfer line is added between the high and low temperature suction accumulators to allow excess liquid to move to the low temperature accumulator. A liquid transfer system is incorporated with the low temperature accumulator to move the excess liquid back to the high pressure receiver as needed. The liquid transfer system shown will be required when the number of defrosts exceeds approximately (6) x defrosts per day in medium temperature (32 deg F) rooms and/or (2) x defrosts per day in freezer rooms. The system shown is also appropriate for freezing where the low side pressure is below 0 psig with the necessary oil pot installed on the low temperature accumulator. Expected charge for this type of system is in the range of 6.5 to 7 lbs of ammonia per ton of refrigeration.

Important features in Figure A3 required for proper DX ammonia operation include:

a. Defrost condensate from hot gas defrosting units is returned to the high pressure suction accumulator. This effectively captures any water in the ammonia in this vessel where it can be distilled and removed.
b. Defrost condensate returning from hot gas defrosting units is utilized in the flooded plate heat exchanger to subcool the high pressure liquid. When there is insufficient condensate to keep the subcooler flooded, makeup liquid is added via a makeup line to maintain a liquid level in the accumulator sufficient to achieve the required amount of subcooling. When the number of defrosts exceeds approximately (6) x defrosts per day in medium temperature (32 deg F) rooms and/or (2) x defrosts per day in freezer rooms, it is likely that excess defrost condensate will have to be drained from the high temperature accumulator to the low temperature accumulator via the transfer line. From there this excess liquid is transferred back to the high pressure receiver using the liquid transfer system shown.
c. The water still shown in this system is heated by high pressure liquid. The vent line from the still is connected to the low pressure suction accumulator in order to achieve the greatest distilling effect possible. It should only be necessary to operate the still during startup and commissioning in order to initially dry out

© 2016 Colmac Coil Manufacturing Inc.

the system. After the first few weeks of operation most of the water will have been removed from the system and the line from the high pressure accumulator to the still should be closed and the still left idle. With systems which operate the low side in a vacuum (blast freezing), the still should be operated once or twice per year to remove any water that may have accumulated in the ammonia.

d. The liquid line pressure is nominally reduced by a pressure reducing valve (PRV) downstream of the subcooler heat exchanger. The purpose of the PRV is to stabilize the liquid line pressure which improves the operation of expansion valves (reduces the potential for hunting).
e. Any oil leaving the oil separator as vapor will be condensed back to liquid in the condenser and settle to the bottom of the high pressure receiver. The liquid supply to the liquid line should be taken from a point 2-3" up from the bottom of the receiver vessel on the end opposite the connection coming from the outlet of the condenser. This will result in a process of secondary oil separation in the pool of high pressure liquid in the receiver and will significantly reduce the amount of oil circulated to the evaporators.
f. When liquid injection oil cooling is used as shown in this P&ID, liquid for oil cooling should be taken from a drop leg located between the inlet connection (coming from the condenser outlet) and outlet connection (to the liquid line). The drop leg gives priority liquid to the compressors for cooling and also returns any accumulated oil.
g. Hot gas for defrosting is taken from the top of the high pressure receiver to minimize the amount of oil sent to the evaporators in the hot gas. Forcing the hot gas to pass through the receiver vessel serves to desuperheat and "de-oil" the gas prior to entering the hot gas line.
h. A pressure reducing valve (PRV) can be installed in the hot gas line to manage the pressure and flow of hot gas for defrosting adding to system stability.

4. Single Stage (Screw) Glycol Med Temperature/DX Low Temperature - Figure A4

Figure A4 shows a very low ammonia charge design which utilizes a secondary refrigerant (glycol) for the high temperature rooms. The system uses a plate type water cooled condenser to further reduce the ammonia charge. This in combination with low charge DX evaporators in the low temperature rooms produces a system with an ammonia charge in the range of only 3 lbs of ammonia per ton of refrigeration.

Important features in Figure A4 required for proper DX ammonia operation include:

a. Defrost condensate from hot gas defrosting units is returned to the high temperature accumulator which also acts as the glycol chiller surge drum. This effectively captures any water in the ammonia in this vessel where it will be distilled over time and removed as necessary.
b. The plate type condenser sends makeup liquid to the glycol chiller surge drum via a high side float valve. This vessel handles the surge volume of liquid for the system. Priority high pressure liquid for the low temperature evaporators is sent

© 2016 Colmac Coil Manufacturing Inc.

first to a boil-out coil in the low temperature accumulator and then then to a plate type DX subcooler.

c. The liquid line pressure is nominally reduced by a pressure reducing valve (PRV) downstream of the subcooler heat exchanger. The purpose of the PRV is to stabilize the liquid line pressure which improves the operation of expansion valves (reduces the potential for hunting).
d. A heated oil pot is shown in the drop leg of the low temperature suction accumulator.
e. Oil is cooled using cooling tower water.
f. A pressure reducing valve (PRV) can be installed in the hot gas line to manage the pressure and flow of hot gas for defrosting adding to system stability.

5. Two Stage Screw with Intercooling - Figure A5

Two stage compression as shown in Figure A5 offers higher energy efficiency compared to the single stage refrigeration system configurations shown. This will be the design of choice when either very low operating costs and/or when blast freezing temperatures are required. The glycol oil cooling method shown in this P&ID minimizes the system ammonia charge and also offers the possibility of heat reclaim, underfloor heating, etc. Expected charge for this type of system is in the range of 6.5 to 7 lbs of ammonia per ton of refrigeration.

Important features in Figure A5 required for proper DX ammonia operation include:

a. Defrost condensate from hot gas defrosting units is returned to the high pressure suction accumulator/intercooler. This effectively captures any water in the ammonia in this vessel where it will be distilled over time and removed as necessary.
b. Defrost condensate returning from hot gas defrosting units is utilized in the flooded plate heat exchanger piped to the high temperature suction accumulator/intercooler to subcool the high pressure liquid. The condensate also quenches the booster discharge gas. When there is insufficient condensate to keep the subcooler flooded and quench the booster discharge gas, makeup liquid is added via a makeup line controlled on liquid level in the accumulator.
c. The liquid line pressure is nominally reduced by a pressure reducing valve (PRV) downstream of the subcooler heat exchanger. The purpose of the PRV is to stabilize the liquid line pressure which improves the operation of expansion valves (reduces the potential for hunting).
d. In this system a high pressure pilot receiver is used in lieu of a high pressure receiver. Priority liquid from the pilot receiver is sent first to a boil-out coil in the low pressure accumulator to boil off any incidental liquid which may return from the low temperature evaporators in the case of an upset condition. The liquid line then continues to the flooded plate heat exchanger to be subcooled. A high side float valve sends the remaining liquid in the pilot receiver to the high temperature accumulator/intercooler vessel. The liquid level in the pilot HP receiver will surge slightly as evaporators go in and out of defrost. Because the

© 2016 Colmac Coil Manufacturing Inc.

pilot receiver is relatively small, the high temperature accumulator/intercooler must be sized large enough to most, in not all, of the system charge.

e. A pressure reducing valve (PRV) can be installed in the hot gas line to manage the pressure and flow of hot gas for defrosting adding to system stability.
f. Glycol oil cooling shown in this diagram not only reduces system ammonia charge, but also conveniently allows the heated glycol to be used for underfloor heating, heat reclaim, etc.

6. Two Stage Reciprocating with Intercooling - Figure A6

Two stage compression with VFD speed controlled direct drive reciprocating compressors as shown in Figure A6 represents the state-of-the-art low charge ammonia system configuration. This system will operate with significantly lower power consumption (as much as 50% less) than any of the designs mentioned above, particularly the traditional constant speed single stage screw compressor configurations. compared to the single stage refrigeration system configurations shown. Modern reciprocating compressor technology does not require cylinder head (oil) cooling, and when applied with recommended oil separator technology exhibits little to no oil carryover. Expected charge for this type of system is in the range of 6.5 to 7 lbs of ammonia per ton of refrigeration.

Important features in Figure A6 required for proper DX ammonia operation include:

a. Defrost condensate from hot gas defrosting units is returned to the high pressure suction accumulator/intercooler. This effectively captures any water in the ammonia in this vessel where it will be distilled over time and removed as necessary.
b. Defrost condensate returning from hot gas defrosting units is utilized in the flooded plate heat exchanger piped to the high temperature suction accumulator/intercooler to subcool the high pressure liquid. The condensate also quenches the booster discharge gas. When there is insufficient condensate to keep the subcooler flooded and quench the booster discharge gas, makeup liquid is added via a makeup line controlled on liquid level in the accumulator.
c. The liquid line pressure is nominally reduced by a pressure reducing valve (PRV) downstream of the subcooler heat exchanger. The purpose of the PRV is to stabilize the liquid line pressure which improves the operation of expansion valves (reduces the potential for hunting).
d. In this system a high pressure pilot receiver is used in lieu of a high pressure receiver. Priority liquid from the pilot receiver is sent first to a boil-out coil in the low pressure accumulator to boil off any incidental liquid which may return from the low temperature evaporators in the case of an upset condition. The liquid line then continues to the flooded plate heat exchanger to be subcooled. A high side float valve sends the remaining liquid in the pilot receiver to the high temperature accumulator/intercooler vessel. The liquid level in the pilot HP receiver will surge slightly as evaporators go in and out of defrost. Because the pilot receiver is relatively small, the high temperature accumulator/intercooler must be sized large enough to most, in not all, of the system charge.

© 2016 Colmac Coil Manufacturing Inc.

e. A pressure reducing valve (PRV) can be installed in the hot gas line to manage the pressure and flow of hot gas for defrosting adding to system stability.

IV. System Stability

With liquid overfeed and gravity flooded systems, liquid return to the recirculator vessel or the surge drum is normal and expected through the wet suction line. The recirculator vessel or surge drum effectively separates returning liquid from vapor and ensures that the dry suction line carries only vapor back to the compressor.

DX systems, on the other hand, are designed to operate with a dry suction line and are by definition more sensitive to liquid floodback. Industrial DX systems should incorporate a suction accumulator vessel to prevent liquid slugging of the compressor during a floodback event, however, excessive floodback from evaporators can cause high level alarming and system shutdown until the excess liquid in the suction accumulator can be transferred back to the high pressure side of the system. Stable and smooth operation of the system and the evaporator expansion valve(s) is critical to avoiding liquid floodback. Instabilities and/or rapid changes in discharge and suction pressures during operation are the typical cause of unstable operation of expansion valves and should be considered carefully by the system designer and operator(s).

Rapid changes in system discharge pressure can cause system instabilities in a number of ways. A sudden reduction in discharge pressure can result in undesirable flashing of liquid refrigerant in liquid lines and will also be accompanied by a sympathetic, albeit smaller, reduction in suction pressure. A sudden increase in discharge pressure will be accompanied by a sympathetic, albeit smaller, increase in suction pressure. An increase in suction pressure, if large enough and rapid enough, will suppress boiling in the evaporators which can directly lead to liquid floodback from the evaporators to the suction accumulator.

Rapid changes in discharge pressure are normally caused by one or more of the following events:

a. Condenser fans cycling on and off,
b. Evaporative condenser pumps cycling on and off,
c. Evaporator(s) initiating hot gas defrost,
d. Compressor(s) cycling on and off

**NOTE: Design the system to limit the rate of change in condensing temperature to no more than 5 deg F/minute.

Rapid changes in system suction pressure can also result in system instability and poor performance. A sudden increase in suction pressure can result in liquid floodback from DX evaporators. This sudden increase in suction pressure raises the temperature of the evaporator, reduces the imposed load, and results in liquid refrigerant exiting the evaporator before the expansion valve can respond and reduce the flow of refrigerant entering the evaporator accordingly.

© 2016 Colmac Coil Manufacturing Inc.

Rapid changes in suction pressure are normally caused by:

a. Compressor(s) cycling on and off
b. Multiple liquid feed solenoids cycling on and off
c. Evaporator fans cycling on and off
d. Evaporators starting or finishing defrost
e. Sudden changes in imposed load on evaporators

**NOTE: Design the system to limit the rate of change in suction temperature to no more than 2 deg F/minute.

Following are recommended system design features which will serve to maximize system pressure stability and minimize the potential for liquid floodback from evaporators.

1. Condenser Fans
   a. Use of VFD fan speed control instead of fan cycling for control of head pressure is recommended.

2. Condenser Pumps
   a. It is recommended that evaporative condenser sump water pumps be operated continuously rather than cycling on and off, provided ambient weather conditions allow. Continuous running is also recommended to minimize corrosion on galvanized condenser tube bundles.

3. Compressor Capacity Control
   a. Use of VFD speed control for capacity where possible and appropriate.
   b. Limit capacity loading/unloading steps (on/off) to no more than 10% of total system capacity.
   c. Limit the rate of change of suction temperature (speed of screw compressor slide valve movement) to no greater than 2 deg F/minute.

4. Evaporator Defrost
   a. Defrost the minimum number of evaporators at one time.
   b. Use a bleed line or a two-step valve with pressure bleed feature to equalize pressure slowly at the end of defrost.

5. Evaporator Fans
   a. Fan speed and cooling capacity can be controlled by VFD, however the following guidelines must be observed when applied to DX evaporators:
      - Rate of change in fan speed must be gradual and limited to result in no more than 2 deg F/minute change in suction temperature.
      - Minimum fan speed must be set to no less than 25% of full speed.
   b. If fans are going to be cycled on/off for capacity control, no more than 10% of the total number of evaporator fans should be cycled on or off at the same time.

© 2016 Colmac Coil Manufacturing Inc.

6. Liquid Feed Solenoids
    a. Avoid cycling multiple liquid feed solenoids all at the same time. i.e. Liquid feed solenoids should be cycled sequentially.
7. Sudden changes in load on Evaporators
    a. Avoid locating evaporator directly above doorways.
    b. Mitigate intermittent process loads located close to evaporators.

V. Evaporator Selection and Operation

1. DT1 vs DTM ratings

As explained in detail elsewhere (Nelson 2012(a)) evaporator manufacturers typically present their capacity ratings using one of two definitions of temperature difference, DT1 or DTM. Some manufacturers publish ratings based on both DT1 and DTM and allow the designer to choose the preferred definition:

DT1 = Air On Temperature – Evaporator Temperature
DTM = Average ("Room") Air Temperature – Evaporator Temperature

Figure 1 below graphically illustrates these two definitions of temperature difference for the same evaporator and their effect on LMTD (Log Mean Temperature Difference), and hence rated capacity. In this example, the same evaporator having a -20 deg F evaporating temperature rated using DTM "produces" 33.3% (DTM LMTD of 9.6 deg F versus DT1 LMTD of 7.2 deg F) more capacity than the same evaporator rated using DT1!

In short, by using the DTM rating method a manufacturer can show cooling capacities that are much higher (30 to 40% higher), and so offer a lower cost evaporator with much less surface area than the manufacturer using the DT1 rating method.

Unfortunately, one cannot get "something for nothing". Even though evaporators selected using DTM ratings will be cheaper initially because they have less surface area, they will cause the system to run at a lower suction pressure with higher operating costs than evaporators selected using DT1 ratings. This difference in operating cost between DTM and DT1 evaporators has been calculated and the incremental return on investment shown to dramatically favor selecting evaporators using DT1 ratings (Nelson 2012(b)). Additionally, in the same article the author shows that the basic DTM assumption that the average air temperature within the evaporator equals the average room temperature is a fundamentally flawed and false assumption because of air entrainment and mixing in the room.

© 2016 Colmac Coil Manufacturing Inc.

FIGURE 1
TEMPERATURE PROFILES FOR DT1 VS DTM

(a) DT1 = 10F (Air On) Temp Difference

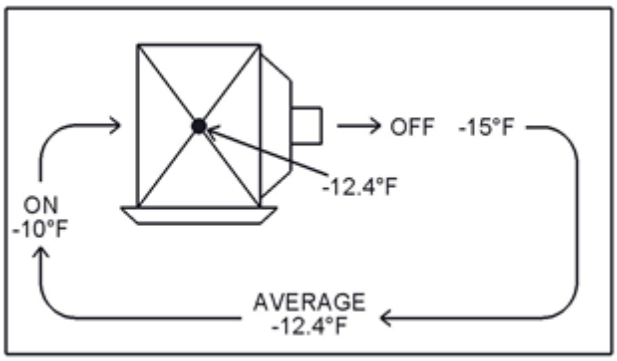

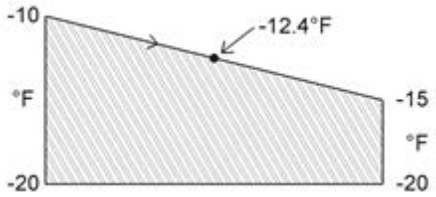

DT1 LMTD = 7.2 F

(b) DTM = 10F (Average) Temp Difference

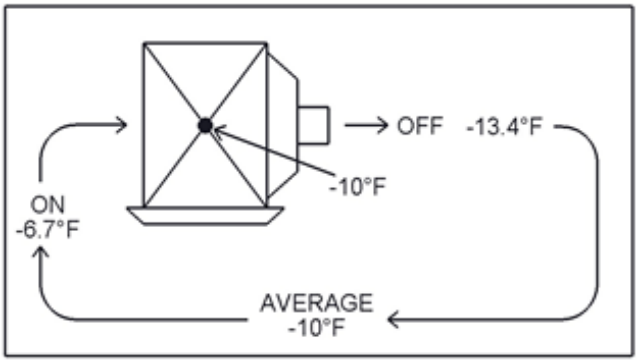

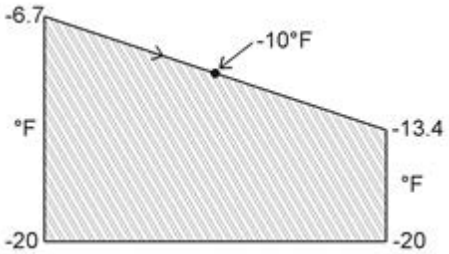

DTM LMTD = 9.6 F

<u>In conclusion, Colmac highly recommends that evaporators be selected using DT1 ratings rather than DTM.</u>

2. Sensible Heat Ratio, Room Relative Humidity (rh%), and Evaporator Ratings

   Accurate prediction of the refrigeration load, both sensible and latent components, is important to proper refrigeration system equipment selection and successful operation (Nelson 2012(a)). Various types of sensible cooling loads must be anticipated and included in the calculation, such as: lighting, electric motors, forklifts, product cooling/freezing, transmission of heat through walls, ceilings, and floors, and cooling of infiltration air. Latent cooling loads are present whenever moisture is added to the air in the refrigerated space. Sources of introduced moisture typically include: infiltration air, respiring food products, surface moisture on products, packaging and other objects entering the space, residual water left on floors after wash down (process rooms), human respiration, and humidification equipment (above freezing).

© 2016 Colmac Coil Manufacturing Inc.

Room relative humidity (rh%), which is the indication of how nearly the air in the refrigerated space is saturated with water vapor, will be the equilibrium condition resulting from the balance of moisture introduced into the space with the moisture removed from space by the evaporator coils (Cleland 2012). Colmac has developed a Refrigeration Load Simulator software program which allows the calculation of refrigeration loads and prediction of relative humidity to more accurately size A+Series™ air coolers using A+Pro software.

3. Optimizing System TD

The product being stored or processed normally determines the room air temperature in a refrigerated facility. Appropriate temperatures for storing and processing various foods and food products can be found elsewhere (ASHRAE 2009).

Once the room temperature is determined, the evaporator temperature must be decided upon by the designer. Compressor power and energy consumption is a strong function of the suction pressure and temperature. The higher the suction pressure the more efficiently the compressor will run and the less power will be consumed. Energy efficiency can be characterized by a ratio termed Coefficient of Performance (COP), defined as:

$$COP = \frac{Useful\ Output}{Input} \tag{2}$$

In the case of a refrigeration compressor,

$$COP = \frac{Cooling\ Capacity, kW}{Input\ Power, kW} \tag{3}$$

Figure 3 below shows typical ammonia screw compressor COP vs SST (Saturated Suction Temperature). The figure assumes 2-Stage compression is used below a suction temperature of -20 deg F.

© 2016 Colmac Coil Manufacturing Inc.

FIGURE 3

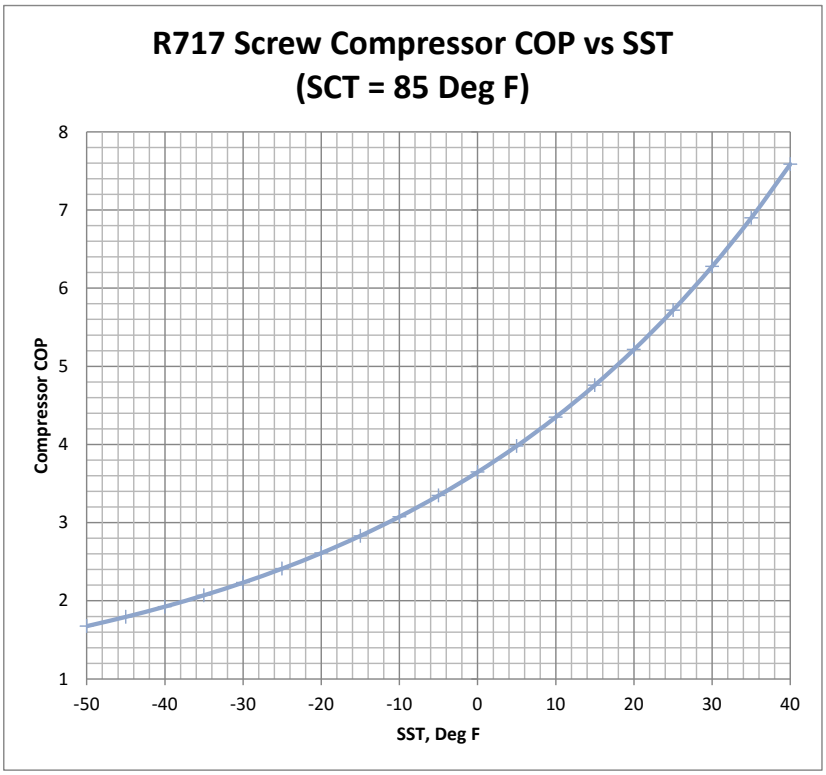

It would appear from Figure 3 that a smaller TD (TD = Room Temperature – Evaporator Temperature) would always be desirable from an energy consumption standpoint since the smaller the TD, the higher the evaporator (SST) temperature and compressor COP. This, however, is not the case.

Heat is transferred from the room via the air circulated by the evaporators. The cooling capacity of an evaporator can be characterized by the NTU-effectiveness equation. This equation indicates that for a constant cooling capacity and evaporator effectiveness (an expression of how closely the leaving air temperature approaches the evaporating temperature), the flow rate of the air will be inversely proportional to the TD.

$$\dot{q} = \dot{m} \cdot C_p \cdot \varepsilon \cdot TD \tag{4}$$

Where:
$\dot{q} = Cooling\ Capacity$
$\dot{m} = Mass\ Flowrate\ of\ Air$
$C_p = Specific\ Heat\ of\ Air$
$\varepsilon = Evaporator\ NTU - Effectiveness$
$TD = Air\ On\ Temperature - Evaporating\ Temperature$

© 2016 Colmac Coil Manufacturing Inc.

Evaporator effectiveness is, in fact, very nearly constant over the typical narrow operating range of a refrigeration evaporator. The effectiveness equation shows that as TD becomes smaller, the air flowrate must become larger in the same proportion for a given cooling capacity.

Fan power can be calculated using a simple equation as follows:

$$\dot{W}_{fan} = \frac{\dot{Q} \cdot dp}{\emptyset_{tot}} \tag{5}$$

Where:
$\dot{W}_{fan} = Fan\ Power$
$\dot{Q} = Volumetric\ Flowrate\ of\ Air$
$dp = Total\ Pressure\ Across\ Fan\ (Static + Dynamic)$
$\emptyset_{tot} = Total\ Fan\ Efficiency$

The air pressure drop through the evaporator coil, and therefore fan power, will be affected by:

1. The coil face velocity,
2. Tube diameter, spacing, and pattern,
3. Number of coil rows deep,
4. Fin spacing and pattern
5. Frost thickness

The relationships above indicate that compressor COP will decrease with increasing TD while Fan COP will increase with increasing TD. Figure 4 shows these relationships for an example evaporator coil having 8 rows deep and 3 FPI fin spacing.

© 2016 Colmac Coil Manufacturing Inc.

FIGURE 4

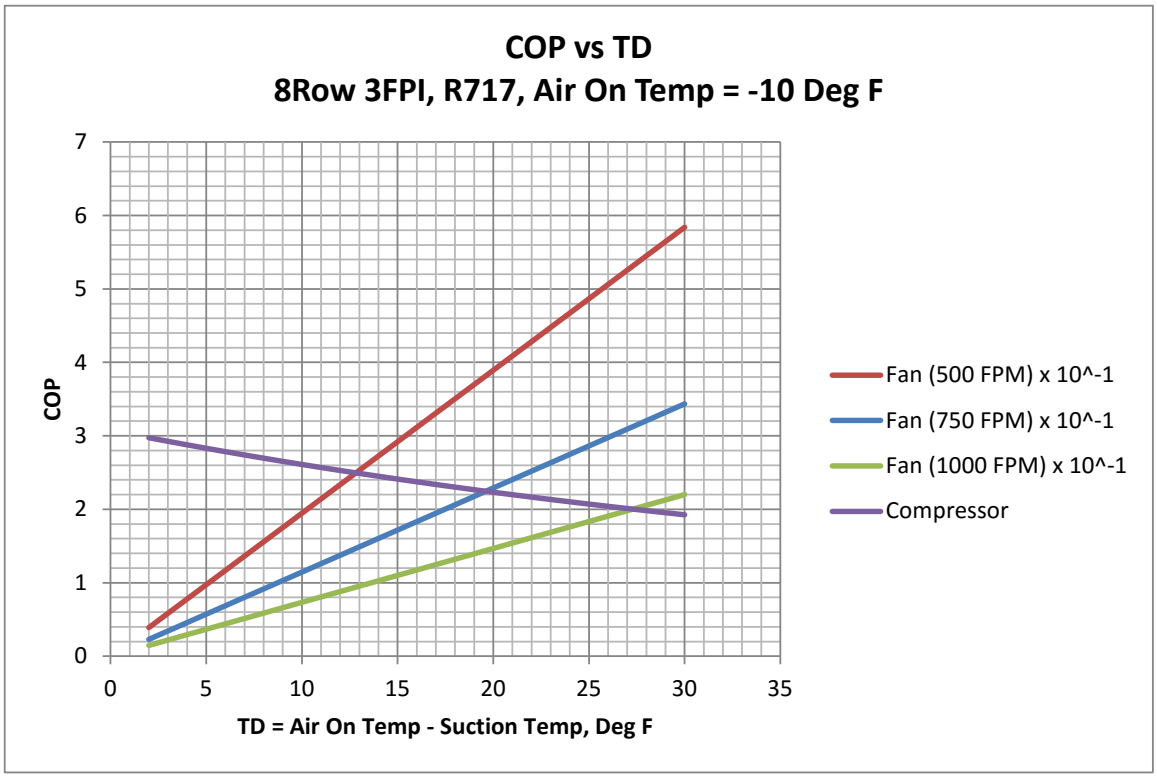

Figure 4 implies there will be some maximum combined COP for compressor and fans which will represent the optimum operating TD in terms of energy efficiency. This combined COP is shown below in Figures 5, 6, and 7, for a typical ammonia evaporator coil having the following characteristics:

Tubing: 7/8” OD Aluminum
Tube Pattern: 2.25” Staggered
Fins: Configured Aluminum Plate Type
Rows Deep: 8
Face Velocity: 500, 750, and 1000 FPM
Fin Spacing: 2, 3, and 4 FPI
Air On Temperature: -10 deg F
Frost Thickness: 0 mm

© 2016 Colmac Coil Manufacturing Inc.

FIGURE 5

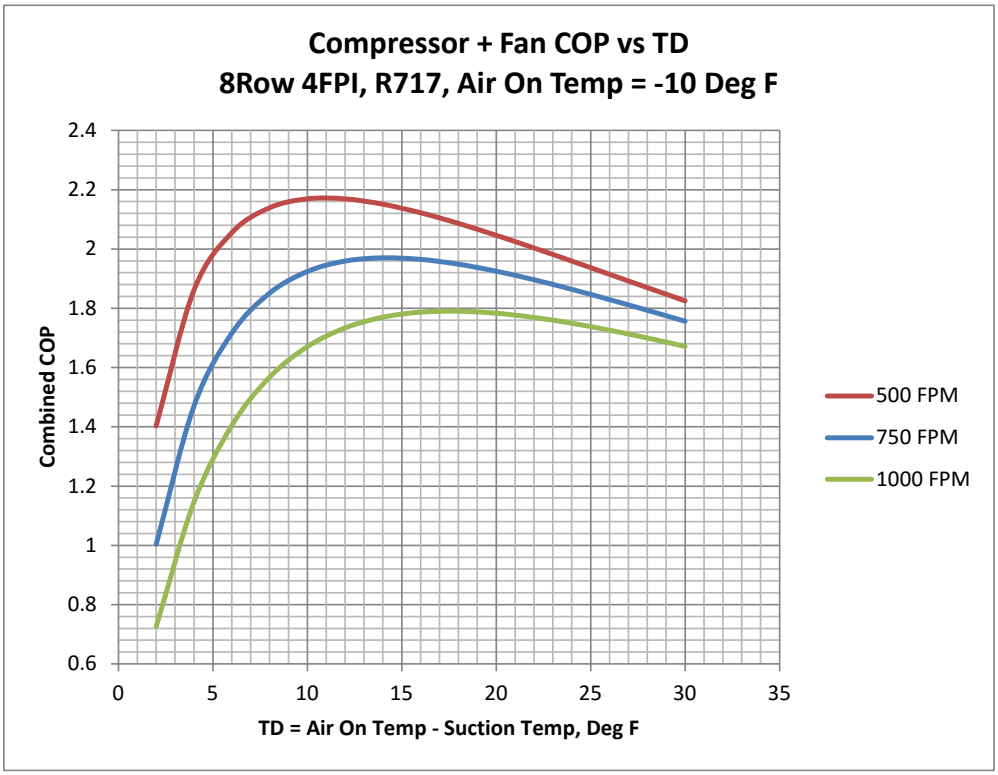

FIGURE 6

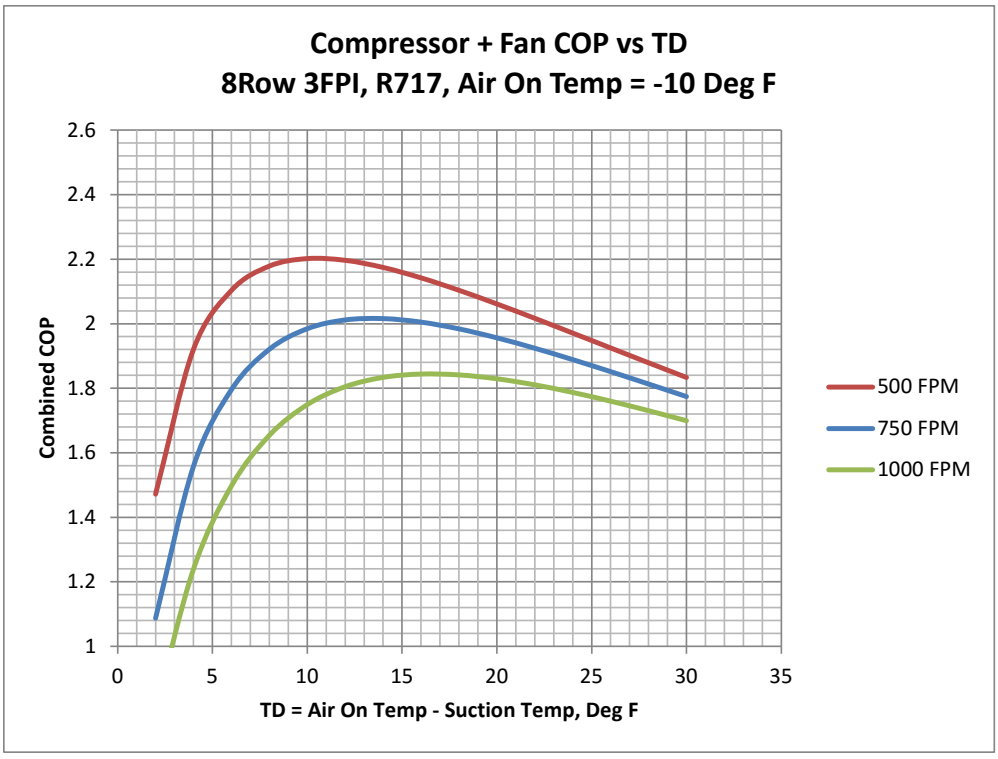

© 2016 Colmac Coil Manufacturing Inc.

FIGURE 7

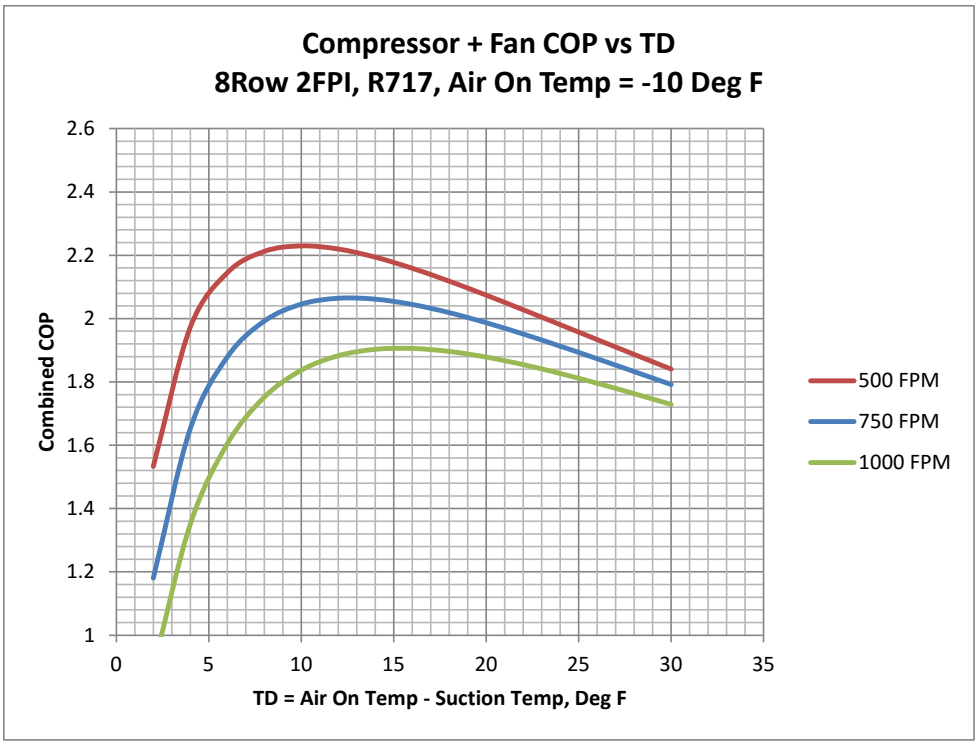

The following is observed from Figures 5 through 7:

a. Combined COP is a very strong function of coil face velocity. COP at 500 FPM is approximately 10% higher than COP at 750 FPM and 20% higher than COP at 1000 FPM.
b. Combined COP increases as the distance between fins is increased. Coils with 2FPI spacing will have higher combined COP than coils with 3FPI, which will have higher COP than 4FPI.
c. The optimum (maximum) TD increases with increasing face velocity.
d. In all cases, combined COP decreases very rapidly below about 7 deg F TD.

In order to make the final decision about selecting the optimum TD, the cost of power as well as installed cost of the compressor(s) and evaporators must be known (or estimated). These variables can then be combined to calculate the incremental return on investment comparing different evaporator designs (face velocity and fin spacing) in terms of first cost vs operating cost.

Since these costs are highly variable, the final return on investment calculation must be made on a case-by-case basis and presented to the client in a way which allows the final decision to be made given the project financial constraints and requirements.

© 2016 Colmac Coil Manufacturing Inc.

Conclusions:

1. *For highest system COP / energy efficiency, select evaporators for the lowest face velocity and widest fin spacing financially practical. Colmac recommends maximum face velocity of 600 FPM and fin spacing of 3 FPI or wider (lower FPI).*
2. *For coil face velocities between 500 and 750 FPM a design TD between 10 deg F and 15 deg F is recommended.*
3. *Final optimized evaporator design and TD must be determined based on specific project financial constraints and acceptable return on investment.*

4. Effect of TD on Expansion Valve (EV) Operation

With direct expansion (DX) evaporators the flow of refrigerant to the evaporator is metered by an automatic expansion valve in response to a control signal measured at the evaporator outlet. The control signal is normally the amount of superheat in the refrigerant suction gas. The theoretical maximum amount of suction gas superheat that can be generated is equal to the operating TD (TD = Air On Temperature – Evaporating Temperature).

The amount of superheat required for stable operation (modulation) of the expansion valve varies with the type of valve employed and with the evaporator dynamics. Two basic types of expansion valves are currently available on the market, Thermostatic (TEV) and Electronic (EEV). Both use superheat in the suction gas as the control signal.

Thermostatic expansion valves measure and mechanically calculate superheat by means of a temperature sensing bulb and pressure equalizing line. These valves and their operation are described in detail by the valve manufacturers. The advantage of this type of valve is their low cost and compactness. With this type of valve, temperature sensing is accomplished by a refrigerant-filled bulb strapped to the outside of the coil suction connection. A disadvantage of this system is the additional superheat required to overcome the thermal resistance of the pipe wall. This additional superheat forces the operating TD to be approximately 5 deg F greater than for an electronic expansion valve that uses a temperature transducer to measure temperature directly.

Electronic expansion valves operate based on a signal received from a superheat controller which reads suction gas temperature and pressure from a combination of sensors. The expansion valve itself may operate based on an “open/close” (pulsing) principle or on a motorized positioning principle. Advantages of this type of valve include more accurate and responsive sensing of superheat which allows stable operation at smaller TD than thermostatic type valves. PID control parameters can also be adjusted in the controller to “fine tune” operation over a wide range of conditions. The primary disadvantage of electronic expansion valves is the higher first cost compared to thermostatic valves. This, however, is changing as valve manufacturers are finding lower cost solutions and beginning to offer cost competitive electronic valves to the market.

© 2016 Colmac Coil Manufacturing Inc.

Minimum recommended TD and superheat settings for both types of expansion valves are shown in Table 2 below:

TABLE 2
MINIMUM RECOMMENDED DX AMMONIA TD AND SUPERHEAT SETTING

Expansion Valve Type	Minimum Recommended TD, deg F	Recommended Superheat Setting, deg F
Thermostatic	15	10
Electronic	12	8

Note: Colmac offers factory supplied and mounted expansion valves and controllers, both thermostatic and electronic type.

5. The Effect of Frost Accumulation on Evaporator Performance

The evaporators are the only component in the refrigeration system which lose cooling capacity over time due to the accumulation of frost. Capacity is lost due to a) reduced airflow caused by increasing air pressure drop, and b) the insulating characteristics of frost on coil fins.

The rate of frost accumulation on an evaporator will vary drastically depending the room relative humidity and the coil operating TD. The faster frost accumulates the faster airflow and evaporator cooling capacity are reduced. Nelson (2015) describes this phenomenon and how to select the optimum coil fin spacing and tube pattern for a given set of operating conditions.

It is important to understand the room operating conditions and correctly predict the air Sensible Heat Ratio (SHR) to select the optimum fin spacing and tube pattern. In essence, when the air sensible heat ratio is low - i.e. the accumulation of frost is rapid - it is important to select evaporators with wide (3 fins per inch or less) fin spacing. Inline (vs staggered) tube patterns are also recommended for heavy frost load conditions as this type of coil construction will extend operating time between defrosts.

Air-Borne Ice Crystals

This type of frost is formed quite differently from the frost formed by deposition as explained above. It accumulates on evaporator surfaces by a different mechanism, and is more difficult to quantify and predict.

Rather than accumulate relatively uniformly over the entire coil surface as is the case with frost formed by deposition, air-borne ice crystals accumulate on the leading edges of the coil fins and have the primary effect of restricting airflow. This type of frost is more difficult to predict since its formation depends on not only the condition of the air

© 2016 Colmac Coil Manufacturing Inc.

outside the refrigerated space, but also on the condition of doorways and how they are operated.

When evaporators are located directly above doorways where air-borne ice crystals are formed this type of frost can accumulate very quickly and have serious consequences in terms of degraded performance and inability to defrost effectively due to excessive accumulation of hoar frost and ice. In one particular case observed by the author, two identical evaporators were installed in the same refrigerated space (a -10 deg F freezer) along the same wall, one directly over the doorway and the second offset between doorways. The evaporator directly over the doorway had chronic problems with rapid, heavy accumulation of frost, and with defrost issues related to accumulation of ice on the unit cabinet and in the drainpan. The evaporator located only 20 feet away between doorways, operated without accumulating ice on the cabinet and or in the pan and defrosted normally and effectively. *It is therefore recommended that evaporators not be located directly above doorways whenever possible.*

If it is known that the evaporator will be exposed to this type of frost, variable fin spacing is recommended. That is, a fin spacing arrangement which has fins on the first one to two rows on the air entering side of the coil spaced wider than in the remaining rows. Typical arrangements are 1 / 2 fpi (fins per inch), 1.5 / 3 fpi, and 2 / 4 fpi.

VI. Condenser Selection and Operation

A number of different types of condensers are available for use with ammonia.

- Water Cooled
- Air Cooled
- Evaporative
- Hybrid (Adiabatic) Air-Evaporative

In certain cases the type of compression equipment (screw vs reciprocating) selected and the expected maximum ambient temperature will determine whether or not air cooled condensing will be possible. In other cases the availability (or unavailability) of water may require the use of air cooled condensing. The good news is that DX ammonia is compatible with all types of condensing systems!

Proper selection and operation of ammonia condensing equipment is outlined in the condenser manufacturers' literature.

It is recommended that the system designer carefully consider the following points when selecting/designing condensing equipment:
- Energy efficiency
- Part load operation
- Low ambient operation
- Internal volume and ammonia charge
- Gas inlet and liquid outlet piping

© 2016 Colmac Coil Manufacturing Inc.

- Purging of non-condensable gases
- VFD condenser fan control (highly recommended)
- Refrigerant side pressure drop

VII. Subcooling

Refrigerant liquid leaving the condenser is typically at or near saturation temperature and pressure. If the liquid has not been subcooled before it enters the liquid line, any drop in pressure, and/or any heat input, will cause the liquid to boil and "flash gas" will be formed. Because of the very large volume occupied by vapor compared to liquid, the flash gas increases the refrigerant velocity and causes an excessive pressure drop in the liquid line, This reduces the capacity and interferes with the operation of the expansion valve, and consequently will reduce system capacity. Adequate subcooling of the liquid will prevent the formation of flash gas in liquid lines.

Subcooling the liquid after it leaves the receiver is therefore a necessity for proper system operation. Note that any subcooling done within the condenser or between the condenser and the receiver will be eliminated in the receiver due to the equalizer line. The amount of subcooling required corresponds to the liquid line pressure drop and heat gain. The pressure drop is the sum of 1) the loss in pressure due to elevation gain in the liquid line, 2) liquid line pressure drop due to friction, and 3) pressure drop through service and control valves.

Table 5 shows the pressure drop in liquid lines produced by elevation gain between the receiver and evaporators with ammonia.

TABLE 5

Pressure Drop in Ammonia Liquid Lines Due to Elevation Gain			
Elevation Gain		Pressure Drop	
ft	m	psi	kPa
1	0.3	0.3	1.9
5	1.5	1.4	9.3
10	3.0	2.7	18.7
15	4.6	4.1	28.0
20	6.1	5.4	37.3
25	7.6	6.8	46.7
30	9.1	8.1	56.0
35	10.7	9.5	65.4
40	12.2	10.8	74.7
45	13.7	12.2	84.0
50	15.2	13.5	93.4

Once the total liquid line pressure drop (the sum of elevation pressure drop plus frictional pressure drop plus pressure drop through valves) is calculated, the required amount of subcooling to prevent flash gas in the line can be determined from Table 6. Note that the

© 2016 Colmac Coil Manufacturing Inc.

amount of subcooling required for a given pressure drop increases as condensing temperature decreases.

TABLE 6

Total Liquid Line		Required Amount of Subcooling (Ammonia)					
Pressure Drop		120F (49C) SCT		95F (35C) SCT		65F (18C) SCT	
psi	kPa	deg F	deg C	deg F	deg C	deg F	deg C
1	6.9	0.2	0.1	0.3	0.2	0.5	0.3
4	27.6	1.0	0.5	1.3	0.7	1.9	1.0
6	41.4	1.4	0.8	1.9	1.1	2.8	1.6
8	55.2	1.9	1.1	2.6	1.4	3.8	2.1
10	68.9	2.4	1.3	3.2	1.8	4.7	2.6
12	82.7	2.9	1.6	3.8	2.1	5.6	3.1
14	96.5	3.4	1.9	4.5	2.5	6.6	3.7
16	110.3	3.8	2.1	5.1	2.8	7.5	4.2
18	124.1	4.3	2.4	5.8	3.2	8.5	4.7
20	137.9	4.8	2.7	6.4	3.6	9.4	5.2
25	172.4	6.0	3.3	8.0	4.4	11.8	6.5
30	206.8	7.2	4.0	9.6	5.3	14.1	7.8
35	241.3	8.4	4.7	11.2	6.2	16.5	9.2
40	275.8	9.6	5.3	12.8	7.1	18.8	10.5
45	310.3	10.8	6.0	14.4	8.0	21.2	11.8
50	344.7	12.0	6.7	16.0	8.9	23.5	13.1

A commonly used method of subcooling liquid refrigerant is termed Mechanical Subcooling. This is the COLMAC RECOMMENDED method of liquid subcooling and refers to using a portion of liquid refrigerant from the uncooled liquid line to evaporate and cool the remaining liquid. A heat exchanger (typically a plate type exchanger) is installed in the liquid line in such a way as to cool the liquid refrigerant on one side of the exchanger by evaporating a relatively small amount of the refrigerant on the other side of the exchanger. The evaporating side refrigerant is metered by a TXV or motorized valve in response to liquid line temperature and the evaporated refrigerant then returned to the suction line. This method of subcooling produces predictable results under all conditions, and is required to ensure proper operation of Colmac DX Ammonia evaporator controls. With mechanical subcooling there is no net loss of refrigerating effect or system energy efficiency.

© 2016 Colmac Coil Manufacturing Inc.

Alternate methods for subcooling refrigerant liquid can be applied, but have various drawbacks:

Ambient Subcooling. This involves using a separate circuit within the condenser to route liquid refrigerant from the receiver to the system causing the refrigerant to approach the ambient air temperature. This is a relatively simple design, however the amount of subcooling will be limited to the condenser TD. This may not be a sufficient amount of subcooling to avoid formation of flash gas during certain times of the year. Therefore, this method of subcooling is NOT recommended.

Liquid Pumping. Here a liquid pump is installed at the exit of the receiver to pressurize the liquid line sufficiently to overcome the total pressure drop due to friction and elevation gain. While effective at eliminating flash gas regardless of operating conditions, this method adds complexity and will cause the liquid line to operate at a pressure which is higher than condensing pressure. As with ambient subcooling, this method is NOT recommended.

NOTE: Referring to Figures A1-A3, liquid temperature leaving the mechanical subcooler is shown as 40 deg F. This liquid temperature is conservative and should prevent the formation of flash gas in liquid lines in most if not all cases.

Subcooler Piping:

Figure 12 below illustrates typical mechanical subcooler heat exchanger piping.

FIGURE 12

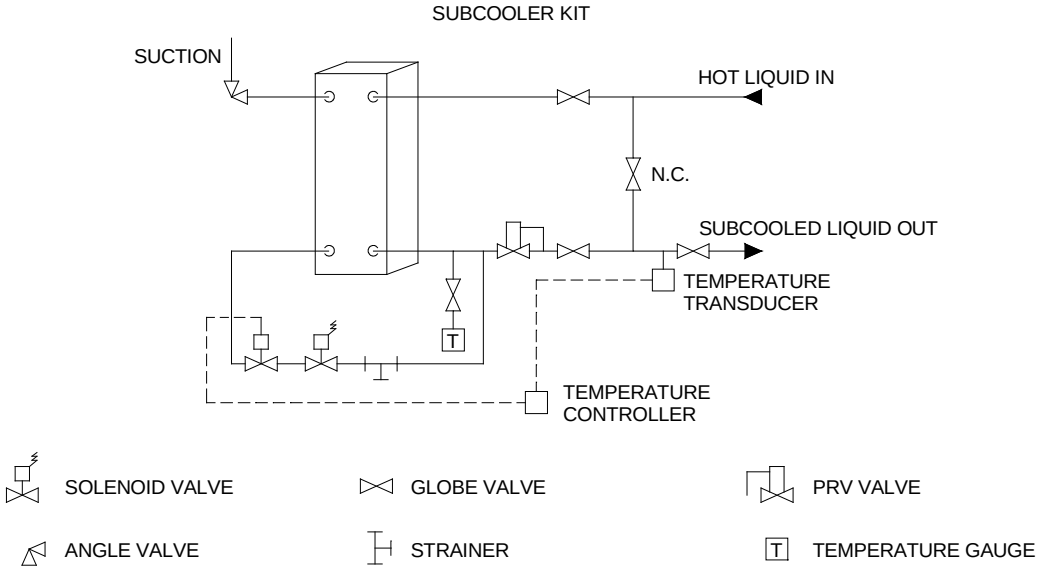

© 2016 Colmac Coil Manufacturing Inc.

To ensure effective liquid subcooling, be sure to observe the following rules:

1. Size piping and valves for the maximum refrigerant flow condition anticipated, i.e. lowest head pressure / highest suction pressure. This condition typically occurs during winter months.
2. Always insulate liquid lines to prevent heat gain and loss of subcooling.
3. Locate subcooler heat exchanger downstream of the receiver at the entrance to the liquid line, NOT between the condenser and receiver. See P&ID examples above.
4. Use good piping practice, as can be found in the IIAR Ammonia Refrigeration Piping Handbook (IIAR 2004).

Mechanical Subcooler Selection:

Colmac offers pre-engineered Mechanical Subcoolers which are factory piped and packaged in a free-standing frame, and include the following components:

- Stainless steel plate-type subcooling heat exchanger
- Electronic expansion valve and temperature controller
- Service (isolation) valves
- Pressure reducing valve for controlled leaving liquid line pressure
- UL listed and wired control panel

See separate Engineering Bulletin for subcooler selection and specification details.

VIII. Piping – General

1. Cleanliness. The small internal passages found in expansion valves (and other control valves) in DX ammonia systems are particularly sensitive to fouling and plugging with relatively small amounts of dirt and debris. For this reason, particular care needs to be taken during the installation of system piping to ensure cleanliness and to minimize the introduction of weld scale and dust, and other types of dirt and debris.

2. Evacuation Prior to Charging the System with Ammonia. Because the performance of DX ammonia evaporators is dramatically affected by even small amounts of water, it is very important to follow good pressure testing and evacuation procedures prior to charging the system with ammonia. Recommended evacuation procedure can be found in the separate Colmac Engineering Bulletin on this topic.

IX. Liquid Lines

Industry-accepted methods and practice for proper sizing and arrangement of liquid lines can be found in the IIAR Ammonia Refrigeration Piping Handbook (IIAR 2004). Additionally, follow the guidelines explained below.

1. Design mass flowrate. Liquid lines must be sized appropriately for the type of line (condenser to receiver, receiver to expansion valve, etc.) and the expected maximum mass flow rate condition. The maximum mass flow rate condition will occur when discharge pressure is at its minimum, suction pressure is at its maximum, and

© 2016 Colmac Coil Manufacturing Inc.

compressors are running fully loaded. Typically this would occur with floating head pressure systems during winter months. Designing liquid lines for the hottest day of the year (commonly taken as the "design point") will likely lead to undersized liquid lines and higher-than-expected pressure drop with the potential of forming flash gas in the liquid line.

2. Insulation. Insulation of liquid lines downstream of the liquid subcooler becomes critically important in DX ammonia systems to avoid heat gain and the potential for developing flash gas in the liquid line upstream of the expansion valves. Use good quality insulation systems with adequate insulation value and protection against physical and weather damage.
3. Type of Expansion Valve. Three types of expansion valves are commonly used in DX systems: 1) Thermostatic, 2) Motorized, and 3) Pulse-width Modulating. Thermostatic and motorized valves modulate in response to the imposed load on the coil and so liquid lines should be sized for the maximum expected design mass flow rate (see paragraph V.1. above). Pulse-width modulating (PWM) expansion valves, on the other hand, alternate between wide open and fully closed at a rate which corresponds to the duty called for by the electronic controller. Because the mass flow rate of refrigerant will be determined by the wide open capacity of the PWM valve, the "local" liquid line from the liquid supply main to the individual evaporator must be sized to handle the maximum capacity of the valve. When PWM valves are used, the liquid supply main line must be sized to handle this "wide open capacity" by using a diversity factor based on the number of evaporators expected to be operating at the same time divided by the total number of evaporators.
4. Pressure Regulating Valve. As shown in Figures A1-A3, the liquid line pressure leaving the subcooler assembly is maintained at 75 psig by a pressure regulating valve. When defrost hot gas pressure is regulated to maintain 90 psig (also shown in Figures A1-A3) this pressure differential allows defrost condensate leaving the evaporators during defrost to be fed directly back into the liquid line and sent to other operating evaporators.
5. Pipe material specifications. Refer to the IIAR Ammonia Refrigeration Piping Handbook (IIAR 2004) and ANSI/IIAR Standard 2-2008 (IIAR 2008) for detailed pipe material specification requirements for ammonia liquid piping.

X. Suction Lines

Unlike pumped ammonia systems, no wet suction lines are needed for DX ammonia. Although they should be pitched and trapped to accommodate the occasional presence of liquid, suction line pressure drop should be calculated to reflect dry operation. Refer to the IIAR Ammonia Refrigeration Piping Handbook (IIAR 2004) for proper sizing and arrangement of dry suction lines. Additionally, follow the guidelines explained below.

1. Design mass flowrate. As with liquid lines, dry suction lines should be sized for the expected maximum mass flow rate condition. Again, the maximum mass flow rate condition will occur when discharge pressure is at its minimum, suction pressure is at its maximum, and compressors are running fully loaded.

© 2016 Colmac Coil Manufacturing Inc.

2. Trapped vertical risers. Suction lines with vertical upflow (suction "risers") must be installed with a p-trap at the bottom (entrance) of the riser and discharge into the top of the overhead suction main pipe. When varying loads on the evaporator are expected, a double riser design should be used. Refer to the IIAR Ammonia Refrigeration Piping Handbook (IIAR 2004) for examples of double suction riser designs.
3. Pitched suction lines. Suction lines must be pitched a minimum of 1/8" per foot toward the suction accumulator to facilitate good drainage of any liquid refrigerant and/or oil that enters the suction line.
4. Pipe material specifications. Particular attention must be paid to carbon steel pipe material specifications in low temperature (suction temperatures below -20 deg F), which may require impact testing. Refer to the IIAR Ammonia Refrigeration Piping Handbook (IIAR 2004) and ANSI/IIAR Standard 2 (IIAR 2008) for detailed pipe material specifications and requirements.

XI. Hot Gas Lines

Industry-accepted methods and practice for proper sizing and arrangement of hot gas lines can be found in the IIAR Ammonia Refrigeration Piping Handbook (IIAR 2004). Additionally, follow the guidelines explained below.

1. Design mass flowrate. Hot gas (defrost) lines should be sized for the mass flow rate corresponding to the maximum number and size of evaporators expected to defrost at the same time. Conventional wisdom maintains that each individual evaporator requires a flow of hot gas equal to 2 x times the flow required during cooling, and so this would limit the number of evaporators being defrosted at the same time to a maximum of 1/3 the total number of evaporators in the facility (the "two-to-one rule"). However, evaporators equipped with Colmac Smart Hot Gas™ controls can effectively defrost an evaporator with hot gas flowing to the evaporator for only 8 to 10 minutes. With an effective building management control system, and depending on the frost load and frequency of defrosting, it is possible to limit the amount of defrost hot gas flowing at any given time to only that required for the largest single evaporator in the facility. This approach obviously has the potential to reduce the hot gas line and PRV size and cost. Expected mass flow rate of hot gas for defrost of a given sized evaporator can be calculated using the method described below in the Hot Gas Defrost section.
2. Insulation. Insulation of hot gas lines is critically important to ensure fast defrosting. Use good quality insulation systems with adequate insulation value and protection against physical and weather damage.
3. Pressure Regulating Valve. As shown in Figures A1-A3, the hot gas line coming from the compressor discharge line is maintained at 90 psig by a pressure regulating valve. When defrost hot gas pressure is regulated to maintain 90 psig and the liquid line is maintained at 75 psig (also shown in Figures A1-A3) this pressure differential allows defrost condensate leaving the evaporators during defrost to be fed directly back into the liquid line and sent to other operating evaporators. Maintaining the hot gas line pressure at the reduced 90 psig also minimizes heat loss to the surrounding ambient.

© 2016 Colmac Coil Manufacturing Inc.

4. Pitched hot gas lines and drip legs. Hot gas lines must be pitched a minimum of 1/8" per foot toward the evaporators to facilitate good drainage of any condensed refrigerant ("condensate") to drip legs installed ahead of the evaporator control valve group(s).
5. Liquid drainers. As hot gas for defrost travels from the engine room to the evaporators some of its energy will be released to heat up the piping itself, and some released due to heat loss through insulation. Condensate will therefore form in the hot gas piping which must then be effectively trapped and drained before it reaches the evaporators. Unless it is effectively removed, accumulating condensed liquid upstream of hot gas solenoid valves will cause cavitation on the seats of the solenoid valves when the valve is closed (Jensen 2013). Condensate will collect in drip legs (described above) and must be returned to either a nearby suction line, or a condensate return line. Use a liquid drainer or an appropriately sized steam trap to allow only liquid to leave the drip leg. Using liquid drainers also effectively keeps hot gas lines continually heated and ready to supply full flow of hot gas to evaporators immediately on demand for defrosting.
6. Pipe material specifications. Refer to the IIAR Ammonia Refrigeration Piping Handbook (IIAR 2004) and ANSI/IIAR Standard 2-2008 (IIAR 2008) for detailed pipe material specification requirements for ammonia hot gas piping.

XII. Effects of Water in Ammonia and Its Removal

As explained in detail elsewhere (Nelson 2010), the presence of even small amounts of water in ammonia has a significant negative effect on DX evaporator performance. Unfortunately, water is difficult to entirely keep out of industrial ammonia refrigeration systems for a number of reasons: Residual water in pressure vessels left from hydro-testing, incomplete evacuation of the system prior to startup, leaks in parts of the system which normally operate in a vacuum, etc.

This residual water goes into solution with the ammonia and increases and the boiling point (bubble point) temperature. At a concentration of 20% (by mass) water in ammonia, the boiling point rises to approximately 10 deg F above the boiling point of pure ammonia at the same pressure. See Figure 13 below.

As the ammonia-water liquid enters the evaporator circuit it begins to boil. Because of the large difference in vapor pressures of ammonia and water, only ammonia vapor is generated during the evaporation process, leaving the water behind in the remaining liquid. So the evaporation process results in an increase in water concentration and a corresponding increase in the boiling point of the refrigerant as it passes through the coil circuit. In the case of an evaporator operating with a 10 deg F TD, the refrigerant will stop boiling once the water concentration reaches about 20% since the boiling point will have risen by 10 deg F. This cessation of boiling will occur at some point along the length of the evaporator circuit, the point at which boiling stops depending on the initial concentration of water and suction pressure. At the point where the increase in the water concentration has caused an increase in the boiling point equal to the coil TD, liquid refrigerant will exit the evaporator and enter the suction line.

© 2016 Colmac Coil Manufacturing Inc.

Figure 13 below shows the increase in boiling point (bubble point) for various initial water concentrations in ammonia at various pressures.

FIGURE 13

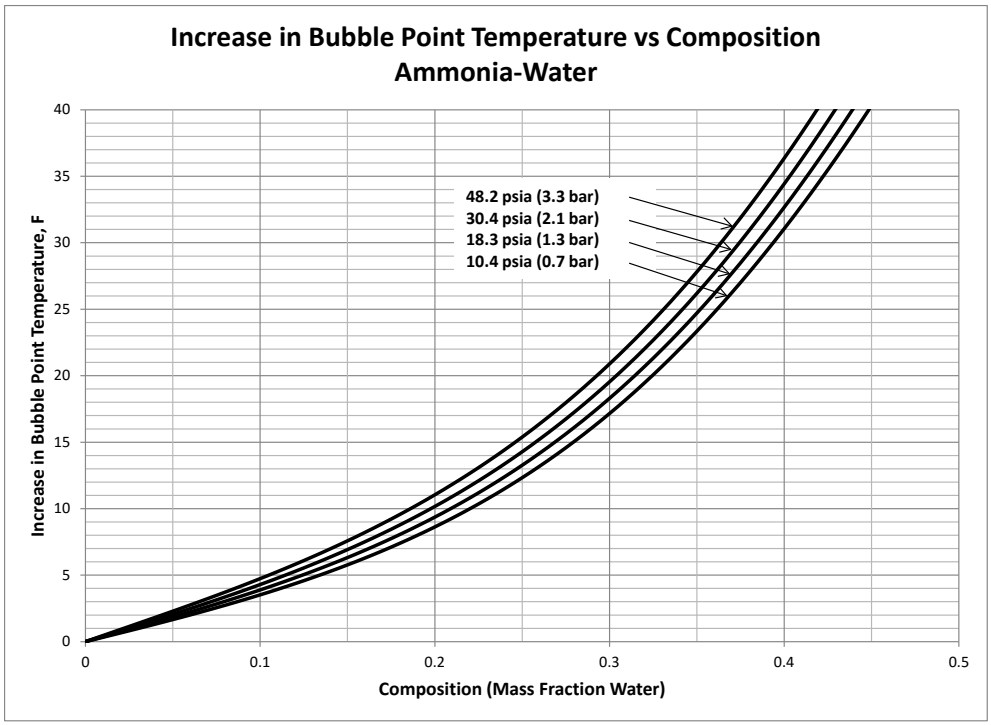

An example of the increase in bubble point temperature over the circuit length of an evaporator, represented by the change in vapor quality, is shown in Figure 14 below for an initial water concentration in ammonia of 3% at a pressure of 10.4 psia (-40 deg F SST). In this example the bubble point (Tbub) has increased by 10 deg F at a vapor quality of approx. 0.89.

© 2016 Colmac Coil Manufacturing Inc.

FIGURE 14

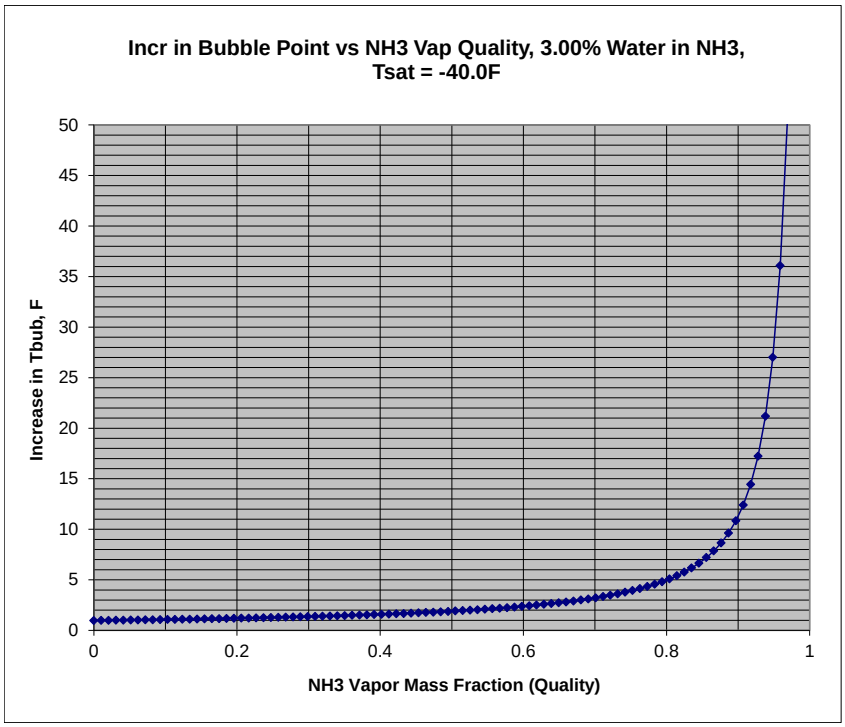

This increase in bubble point significantly reduces the mean temperature difference and therefore the cooling capacity of the evaporator is reduced as illustrated in Figure 15.

FIGURE 15

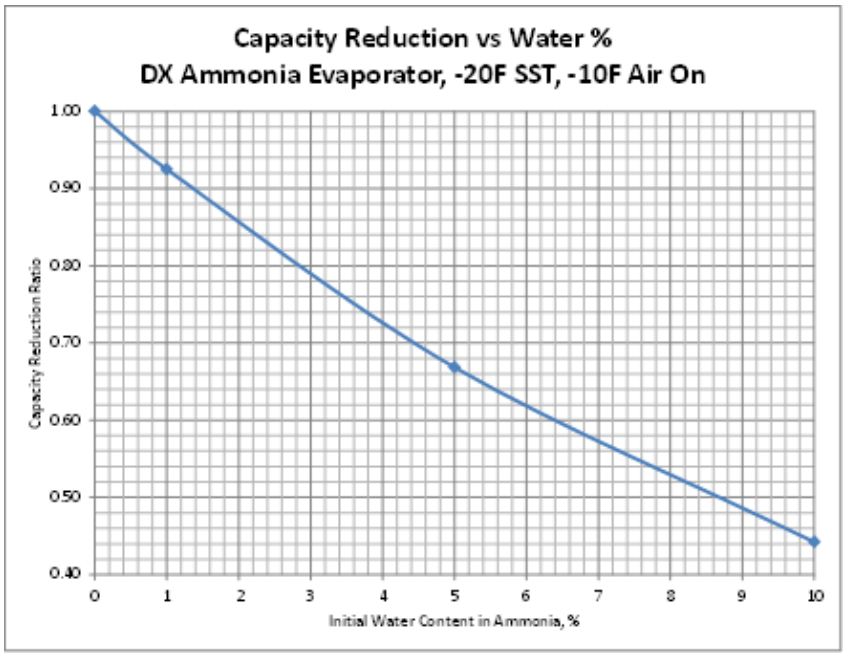

© 2016 Colmac Coil Manufacturing Inc.

In addition to the performance penalty seen when relatively small amounts of water are present in the ammonia, this also means that the mass fraction (1 – 0.89) = 0.11, or 11% of the mass of refrigerant exiting the evaporator as liquid will have to be captured downstream in the suction accumulator.

Knowing that ammonia-water liquid of approximately 20% water concentration will unavoidably leave the evaporators whenever even small amounts of water are present in the ammonia is important for the designer to understand. The suction accumulator must therefore be properly designed to perform the following functions:

i. Separate liquid and vapor refrigerant and allow only vapor to return to the compressor,
ii. Capture and distill (by heating) ammonia-water liquid to a concentration that can safely be removed from the system for disposal.
iii. Transfer excess trapped liquid to the high pressure receiver, or into the reduced pressure liquid line.

1. Separation

   Liquid-vapor separation in suction accumulator vessels is well understood and design methods well documented. Refer to recognized published sizing and design methods (Stoecker 1988, Wiencke 2002).

   Colmac offers a range of pre-engineered factory assembled suction accumulator packages specifically suited to operation with DX ammonia. See separate Engineering Bulletin for selection and specification details.

2. Distillation and Disposal of Ammonia-Water Solution (Ammonium Hydroxide)

   Distillation:

   Ammonia is highly soluble in water due to the polarity of NH3 molecules and their ability to form very strong hydrogen bonds (Nelson 2010). This high solubility makes ammonia-water a good working fluid pair in absorption refrigeration machines, taking advantage of the large vapor pressure differences between the ammonia vapor and weak solution. However, this same behavior makes water removal from ammonia refrigeration systems somewhat challenging.

   As mentioned above, ammonia-water solution concentrated to approximately 20% water will return from evaporators via the suction line to be trapped in the suction accumulator. This aqueous ammonia solution, called Ammonium Hydroxide, at a concentration of 80% ammonia (20% water) would be very difficult to safely remove from the system for disposal. Further distillation of the solution is needed to bring the ammonia concentration in the solution down to the practical minimum before it is removed.

© 2016 Colmac Coil Manufacturing Inc.

The only practical way to distill the Ammonium Hydroxide is by heating in a separate distillation vessel, called a "still". Ammonium Hydroxide trapped in the suction accumulator drains by gravity into the still where it is heated to a temperature corresponding to the point on a Phase Equilibrium diagram where the slope of the dew point line changes rapidly from nearly vertical to more nearly flat. This point is shown on Figure 16 as 'Point A'. Below this temperature (between 100 and 120 deg F), nearly pure ammonia vapor will leave the still and travel through the vent line back to the suction accumulator where it will then be taken back to the compressor. Above this temperature, water vapor will begin to leave the Ammonium Hydroxide solution and exit the still vent line where it will go back into solution with any ammonia liquid present in the suction accumulator. Based on this, the heating element in the still must be controlled to bring the solution temperature up to a maximum of 100 to 120 deg F, at which point it is ready to be removed safely to a storage container for further processing and/or disposal.

FIGURE 16

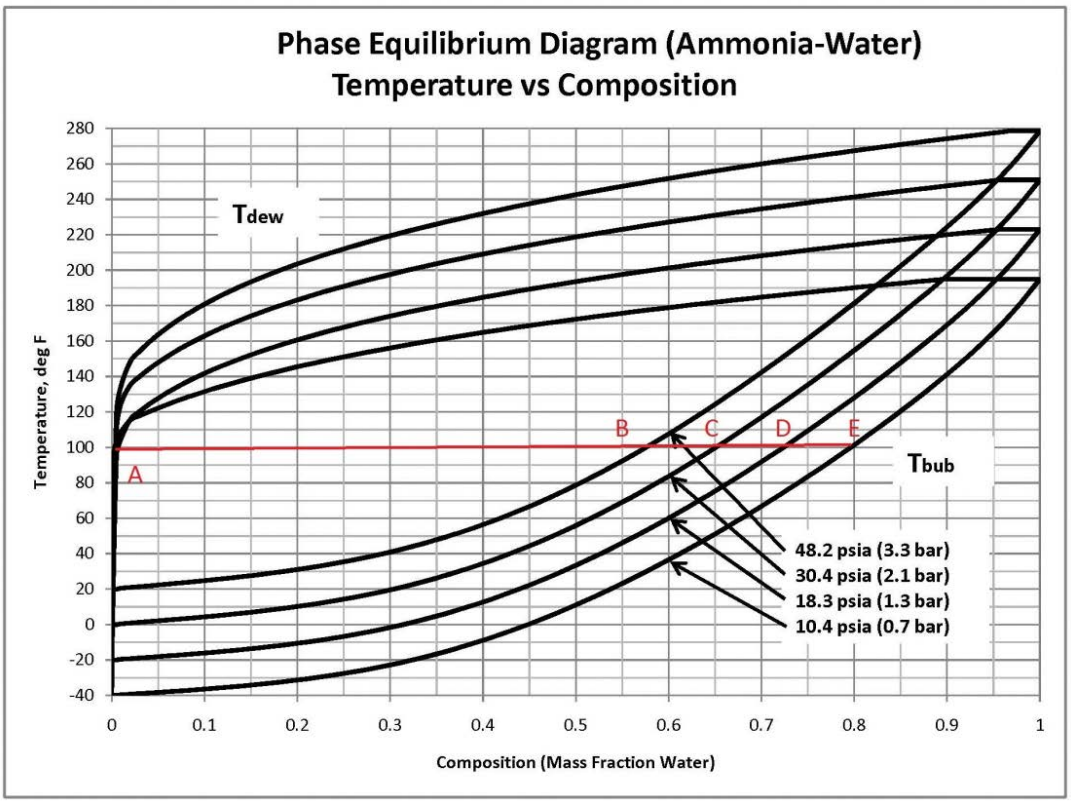

Figure 16 also shows that the maximum water concentration in the Ammonium Hydroxide solution heated to 100 deg F varies with suction pressure. The maximum water concentrations possible are shown as Points B, C, D, and E, in Figure 16, and are listed in Table 7 below. It is apparent from the figure and the table that the still is able to achieve higher water concentrations at lower suction pressures.

© 2016 Colmac Coil Manufacturing Inc.

TABLE 7
AMMONIA-WATER CONCENTRATIONS @ 100 deg F vs SUCTION PRESSURE

Suction Pressure, psia (Saturation Temp, F)	Water Concentration, % by mass	Ammonia Concentration, % by mass
48.2 (+20 F)	57.5	42.5
30.4 (0 F)	65.0	35.0
18.3 (-20 F)	72.5	27.5
10.4 (-40 F)	80.0	20.0

Using the above information, an estimate can now be made of the volume of Ammonium Hydroxide solution that will be generated by the still for a given system ammonia charge having a given initial water content. Table 8 below shows the expected volume of Ammonium Hydroxide solution per pound of initial ammonia charge that will have to be removed by the still (and disposed of) in order to completely remove the water from refrigeration system.

TABLE 8
EXPECTED VOLUME OF DISTILLED SOLUTION AMMONIUM HYDROXIDE @ 100F
(GALLONS per POUND INITIAL AMMONIA CHARGE)

Initial Water	Saturated Suction Pressure, psia (Saturated Temp, F)			
Content, %	48.2 (+20 F)	30.4 (0 F)	18.3 (-20 F)	10.4 (-40 F)
0	0.00000	0.00000	0.00000	0.00000
1	0.00246	0.00211	0.00183	0.00161
3	0.00738	0.00633	0.00550	0.00484
5	0.01230	0.01055	0.00917	0.00807
10	0.02460	0.02109	0.01835	0.01614
20	0.04920	0.04218	0.03669	0.03229

EXAMPLE:
A system has an initial ammonia charge of 5,000 lbs with 3% water content. The still is installed on the -20 deg F suction accumulator. What will be the total volume of distilled Ammonium Hydroxide solution drained from the still?

Answer:
Final Distilled Solution Ammonia Concentration for Disposal (from Table 7): 27.5%
Expected Volume of Distilled Solution per Pound (from Table 8): 0.0055 gal/lbs

Total Expected Volume of 27.5% Ammonium Hydroxide for Disposal:
5,000 lbs x 0.0055 gal/lbs = 27.5 gallons

© 2016 Colmac Coil Manufacturing Inc.

Storage and Disposal:

Ammonium Hydroxide is listed as a hazardous substance under CWA (40 CFR 1164.40 CFR 117.3 Reportable Quantity Category C. 1000lbs/454 kg). As such, it is important to comply with all local and national regulations for safe handling and disposal of the solution removed from the system still (Smith 2010).

It is interesting to note that suitably diluted Ammonium Hydroxide may be disposed of on agricultural land as fertilizer. However, the material should be kept from entering streams and lakes as it is harmful to aquatic life and can cause environmental damage.

Ammonium Hydroxide will react exothermically (heat is generated) with acids, and so neutralizing of the solution by unqualified personnel is not recommended.

It is important to prevent contact of the Ammonium Hydroxide solution with chemicals such as mercury, chlorine, iodine, bromine, silver oxide, and hypochlorites, as they can form explosive compounds. Contact with chlorine forms chloramine gas which is a primary skin irritant and sensitizer.

Figure 16 in combination with Table 7 can be used to predict the temperature above which ammonia vapor will be generated when the distilled solution is stored in an open container. This “vapor neutral” temperature is found using the ammonia concentrations shown in Table 7 for various suction pressures, intersecting a line of constant bubble point temperature (Tbub) at atmospheric pressure (14.7 psia) on Figure 16. Table 9 below shows the ambient (storage) temperatures below which ammonia vapor will not be generated from the Ammonium Hydroxide solution discharged from the still.

TABLE 9
RECOMMENDED MAXIMUM AMMONIUM HYDROXIDE STORAGE TEMPERATURES

Suction Pressure, psia (Suction Temp, F)	Ammonia Concentration, % by mass	Storage Temperature, Deg F
48.2 (+20 F)	42.5	42
30.4 (0 F)	35.0	64
18.3 (-20 F)	27.5	90
10.4 (-40 F)	20.0	108

Ammonium Hydroxide solution has a corrosive reaction with the following materials which should not be used to store the distilled Ammonium Hydroxide solution (LaRoche Industries 1987):

- Galvanized (zinc coated) surfaces
- Copper
- Brass and bronze alloys
- Certain types of elastomers

© 2016 Colmac Coil Manufacturing Inc.

The distilled Ammonium Hydroxide solution can be safely stored in containers made of the following materials:

- Carbon steel
- Stainless steel
- Aluminum
- Cast Iron

Generally speaking, aluminum alloys are not recommended for exposure to aqueous solutions having a pH greater than 9.0 due to accelerated corrosion and metal loss. Ammonium Hydroxide however, even in high concentrations, is an exception to this rule. (Davis 1999).

In conclusion, Ammonium Hydroxide solution collected from the still should be stored in an appropriately constructed container located in a cool space out of direct sunlight. It is recommended that the distilled solution be disposed of using a local qualified waste disposal vendor.

More detailed handling and safety information can be found on MSDS sheets published by suppliers of Ammonium Hydroxide (Tanner Industries 2000, LaRoche Industries 1998).

3. Liquid Transfer

Liquid refrigerant will leave the evaporator(s) and accumulate in the suction accumulator vessel during operation for a number of reasons:

a. Liquid floodback due to water in the ammonia (see above explanation),
b. Liquid floodback due to a rapid change in system pressure and/or load,
c. Liquid condensate from hot gas defrost.

The total anticipated volume of liquid refrigerant reaching the suction accumulator vessel must be calculated by the system designer in order to determine whether or not a liquid transfer system will be needed. As mentioned above, the amount of heat available from subcooling and/or booster discharge gas desuperheating must be equal to or greater than the heat required to vaporize the liquid reaching the suction accumulator. If this is not the case, a liquid transfer system must be added to the design. In order to properly size the transfer system, estimates of the amount of liquid returning from evaporators for the reasons stated above must be made.

i. Liquid Floodback Due to Water in Ammonia

The anticipated volume of ammonia-water liquid leaving the evaporator(s) based on an average 20% water concentration at the evaporator exit has been calculated and shown in Table 10 below. Multiply the value shown in the table by the total capacity

© 2016 Colmac Coil Manufacturing Inc.

of the system in tons (TR) to determine the volume of ammonia-water liquid returning to the suction accumulator.

TABLE 10
VOLUME OF AMMONIA-WATER LIQUID LEAVING DX EVAPORATORS

Water Content in Ammonia, %	Volumetric Flowrate of Ammonia-Water (20% water concentration) Leaving DX Evaporators, ft3/h/TR
0.5	0.01
1.0	0.02
3.0	0.07
5.0	0.12
10.0	0.24

Example:
It has been determined that the ammonia fed to evaporators with total capacity of 200 tons (TR) has a water content of 3%. If the evaporators are operated as direct expansion (DX), how much ammonia-water liquid is expected to return from the evaporators to the suction accumulator?

Answer:
Volume of Floodback Due to Water = 200 TR x 0.07 ft3/h/TR = 14 ft3/h = 1.8 gal/min

In a properly designed and operated system, this type of liquid floodback should only occur initially during startup since water in the system will be captured in the still and then removed.

ii. Liquid Floodback Due to Rapid Changes in Pressure or Load

This type of floodback is difficult to predict, but fortunately is (or should be) relatively small. A 'worst-case' rule of thumb might be to assume that an average 10% of the mass of refrigerant leaves as liquid from 25% of the evaporators. In that case, the transfer system would need to handle a volume of liquid approximated by the following formula:

$$Volume\ of\ Floodback, ft3/h = \frac{\dot{q} \cdot 12{,}000}{h_{fg} \cdot dx} \cdot v \cdot 0.10 \cdot 0.25 \qquad (8)$$

Where:
$\dot{q} = Total\ Evaporator\ Capacity, TR$
$h_{fg} = Latent\ Heat\ of\ Vaporization, Btu/lbm$
$dx = Change\ in\ Vapor\ Quality\ Through\ the\ Evaporator$
$v = Specific\ Volume\ (liquid), ft3/lbm$

© 2016 Colmac Coil Manufacturing Inc.

Example:
200 TR of ammonia evaporator capacity at -25 deg F suction temperature is connected to the suction accumulator. What is the expected average volume of liquid returning to the accumulator due to liquid floodback?
Answer:
Latent Heat of Vaporization, hfg = 550 Btu/lbm
Change in Vapor Quality through the Evaporator, dx = 0.8
Specific Volume (liquid), v = 0.024 ft3/lbm

$$Volume\ of\ Floodback = \frac{200 \cdot 12{,}000}{550 \cdot 0.8} \cdot 0.024 \cdot 0.10 \cdot 0.25 = 3.3 ft3/h = 0.4\ gal/min$$

iii. Defrost Condensate from Hot Gas Defrost

If there is any water present in the ammonia entering the evaporator during low temperature operation, it will be held and distilled in the pores of the proprietary wicking structure on the ID of the Colmac evaporator tubes. This local distillation process degrades the performance of the evaporator by reducing the local mean temperature difference (MTD). Hot gas defrost is critical to removing this “water-rich” liquid from the wicking structure. The ammonia hot gas coming from the high pressure receiver (see Figures A1 thru A4) is essentially water-free and oil-free ammonia. This pure ammonia vapor condenses on the tube ID, dilutes the “water-rich” liquid, and sends it to either the intercooler vessel or the low pressure suction accumulator where it can be distilled in the ammonia still and removed from the system.

This process of “flushing” the evaporators and the system of water during hot gas defrosting should only happen initially during the startup phase for systems which operate with a low suction pressure above one atmosphere (0 psig) and then only periodically for systems with a low suction pressure operating in a vacuum (blast freezing). In the accumulator the water-laden ammonia is captured in the water still, distilled, and removed from the system.

Defrost condensate from hot gas defrosting units is returned to the high pressure suction accumulator. This effectively captures any water in the ammonia in this vessel where it can be distilled and removed. Defrost condensate returning from hot gas defrosting units is utilized in the flooded plate heat exchanger piped to the high pressure suction accumulator to subcool the high pressure liquid. When there is insufficient condensate to keep the subcooler flooded, makeup liquid is added via a makeup line to maintain a liquid level in the accumulator sufficient to achieve the required amount of subcooling. Normally, the heat generated by subcooling equals or exceeds the amount of heat needed to vaporize all of the defrost condensate returning from hot gas defrosting evaporators. If the subcooling load is not high enough to vaporize all the defrost condensate, then the excess liquid must be removed by installing a liquid transfer system to return the liquid to the high pressure receiver. A liquid transfer line to the low pressure

© 2016 Colmac Coil Manufacturing Inc.

suction accumulator is shown in the P&ID, intended to allow excess liquid to be moved from the high pressure suction accumulator to the low pressure suction accumulator only in the event of an upset condition, power failure, restart, etc.

XIII. Effects of Oil on Evaporator Performance and Oil Separation

Immiscible lubricants are recommended over miscible lubricants for large industrial DX ammonia refrigeration systems for a number of reasons:

- Lower cost
- Ease of separation
- Relative insensitivity to contaminants (water, dirt)

Even though immiscible oils are preferred over miscible types for the reasons stated above, any oil reaching the evaporator can potentially coat the inside of the tubes and severely degrade heat transfer performance due to:

1. Added resistance to heat transfer as explained below and shown in Figure 17, and
2. Fouling of the proprietary wicking structure preventing liquid ammonia from coating the inside of the tubes by capillary action.

Even a thin layer of oil coating the inside of evaporator tubes adds resistance to heat flow as shown below.

FIGURE 17

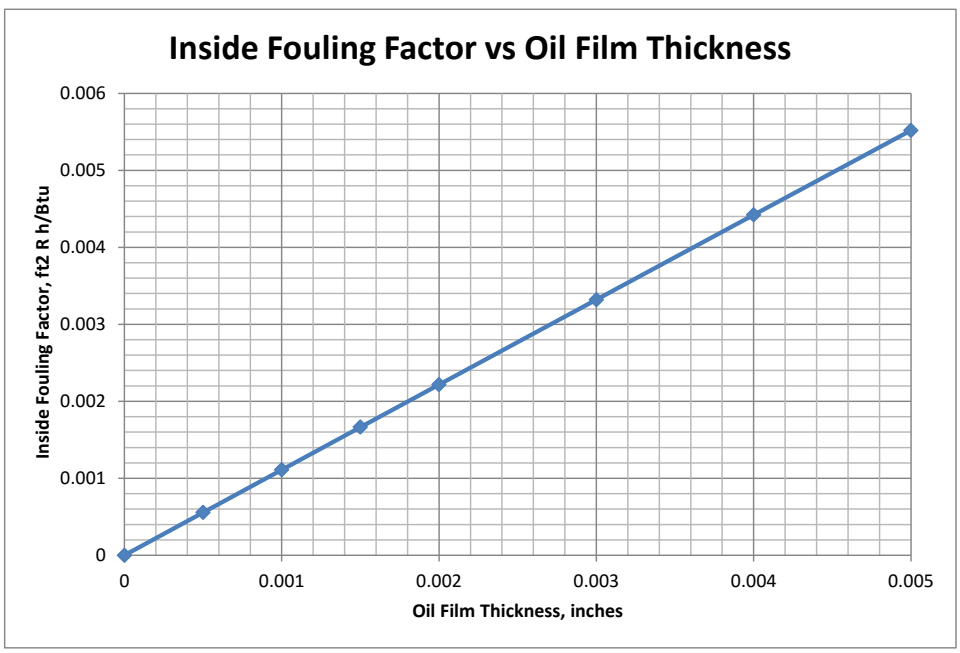

In a typical DX ammonia evaporator, this fouling factor causes a significant reduction in cooling capacity as is shown below in Figure 18.

© 2016 Colmac Coil Manufacturing Inc.

FIGURE 18

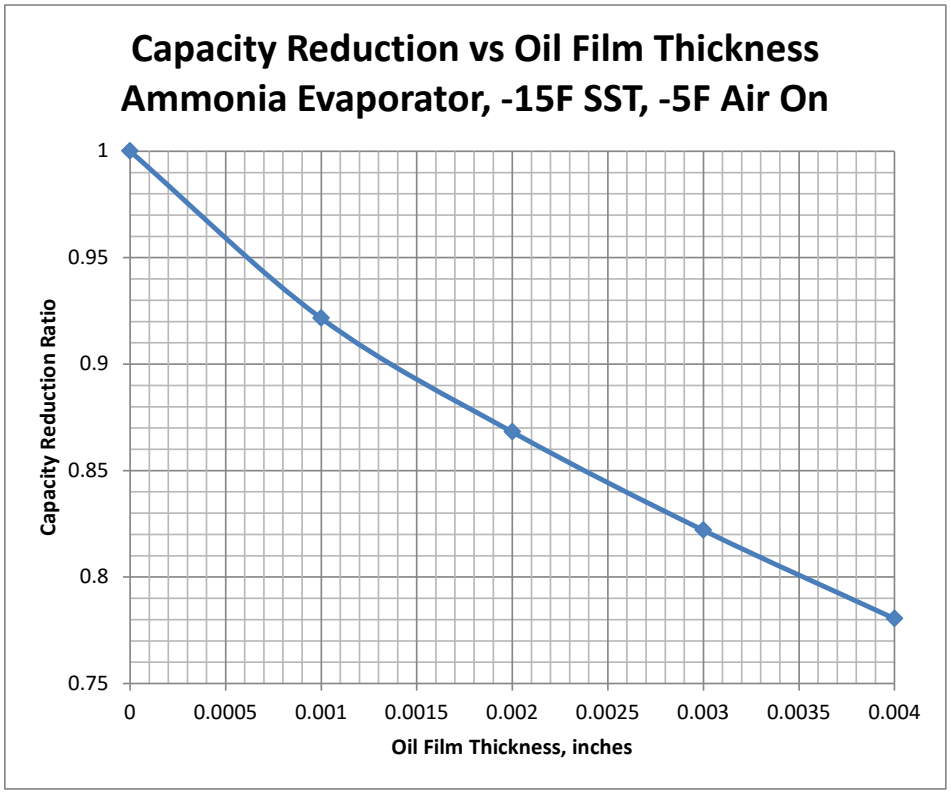

It is apparent from Figures 17 and 18 above that it is highly desirable from an energy efficiency standpoint to prevent compressor lubricating oil from reaching the evaporators. To achieve this, the following should be carefully considered and specified in the system design:

a. Type of compressor lubricating oil
b. Compressor oil separator design and efficiency
c. Oil capture and management at the outlet of the condenser
d. Oil capture in the suction accumulator(s)
e. Oil capture at the evaporator

Type of Oil:

Depending on the type of compressor used (reciprocating or rotary screw), varying amounts of lubricating oil will unavoidably be discharged with the ammonia vapor. Oil will leave the compressor both in liquid droplet form and as oil vapor. The liquid droplets can be captured mechanically in the oil separator vessel by controlling velocity and by incorporating coalescing elements. The oil which is combined with the ammonia in vapor form is more difficult to capture. Generally speaking, as volatility and solubility of the oil increase, separation becomes more difficult. The amount of oil which is not captured in the separator and returned to the compressor is referred to as “oil carryover”.

© 2016 Colmac Coil Manufacturing Inc.

All lubricating oils used in the ammonia refrigeration industry are blends of a base fluid(s) with additives (Wierbosch 2010). The base fluid controls volatility and solubility of the oil. Today, commonly used base fluids include:

- Naphthenic
- Solvent Refined Paraffinic
- Alkyl Benzene
- 2-Stage Hydrocracked
- PAO/AB

The aromatic content of the base fluid has a large effect on vapor pressure (volatility) and solubility. The higher the vapor pressure of the oil, the more oil vapor will leave the compressor with the ammonia in the discharge gas (Briley 1984). Since this oil vapor is difficult to capture in the separator, it is desirable to select an oil which has the lowest vapor pressure possible. Alkyl Benzene and Naphthenic bases have the highest aromatic content, vapor pressure, and solubility. 2-Stage Hydrocracked bases have lowest aromatic content, vapor pressure, and the lowest solubility.

It is therefore recommended that ammonia refrigeration oil having a 2-Stage Hydrocracked base fluid be used in the DX ammonia compression system design. 2-Stage Hydrocracked mineral oil manufactured by CPI ("CPI-1009-68") is recommended for application in reciprocating and screw type ammonia compressors for temperatures above -40.

Another factor affecting oil vapor pressure is the oil temperature. The higher the oil temperature, the higher the vapor pressure. Reducing the discharge gas (and oil vapor) temperature before it enters the separator will therefore reduce overall oil carryover and increase the efficiency of the separator. For example, desuperheating the discharge gas from 80 deg C to 35 deg C reduces the oil vapor pressure, and therefore carryover of oil vapor, by approximately 85% (Wiencke 2012).

Oil Separator:

For successful DX ammonia system operation, an oil separator with coalescing elements capable of guaranteeing 5-7 ppm carryover should be specified and installed.

For reasons mentioned above, it is also recommended that the discharge gas be desuperheated as much as practical prior to entering the oil separator.

NOTE: "Mesh Pad" oil separators as found on older screw compressor packages and reciprocating compressors will not have the required separation efficiency and are not recommended!

© 2016 Colmac Coil Manufacturing Inc.

Oil capture and management at the outlet of the condenser:

As mentioned above, reducing the temperature of the discharge gas down to the saturated condensing temperature (i.e. fully desuperheating) significantly reduces the vapor pressure of the oil in the discharge gas. This reduction of the oil vapor pressure increases the amount of oil available for capture.

Consequently, most of the oil vapor which has escaped the oil separator vessel will be condensed and held in the liquid ammonia leaving the condenser. It is possible to design the high pressure receiver to collect and separate this oil, now in the liquid phase, and then automatically return it to the compressors. It is also desirable to take the "de-oiled" ammonia vapor from the top of the high pressure receiver rather than using oil-laden discharge gas for hot gas defrost. These features are shown in Figures A1 thru A3 in the appendix.

Oil capture in the suction accumulator(s):

Properly designed suction accumulators should include accompanying oil pots to collect and remove any small amount of oil that has made it as far as the evaporators. See Figures A1 thru A3 in the appendix.

Oil Capture at the Evaporator:

As explained above, it is important to prevent fouling of evaporator tubes with oil particularly at low temperatures. To this end, Colmac has developed a proprietary DX ammonia distributor which effectively separates any oil which has escaped the oil separator and high pressure receiver and prevents it from entering the evaporator. The Colmac Tank Distributor (patented) incorporates a drop leg into the body of the distributor tank which serves to collect oil and debris where it can be periodically drained and removed from the system at the evaporator.

Figure 19 below shows a cross section of the Colmac Tank Distributor with its integral drop leg feature for capturing and removing oil.

© 2016 Colmac Coil Manufacturing Inc.

FIGURE 19
COLMAC TANK DISTRIBUTOR (CROSS SECTION)

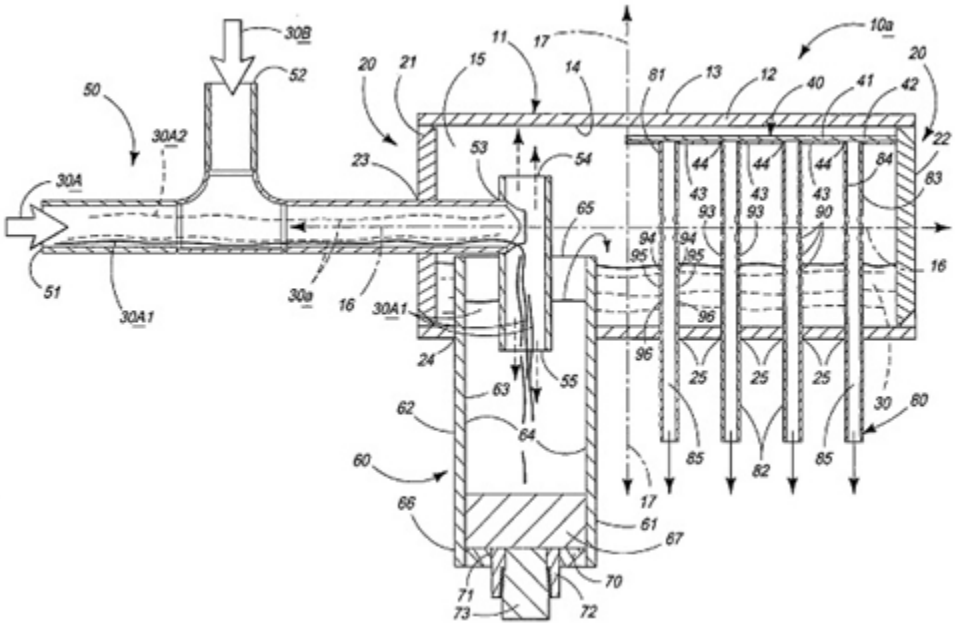

Unlike conventional orifice plate type distributors, the Colmac Tank Distributor operates with very low pressure drop and is well suited to the following applications:

- DX ammonia utilizing motorized expansion valves
- Floating head pressure systems
- Evaporators designed for operation with more than one refrigerant

XIV. Estimating DX Evaporator Refrigerant Charge Inventory

In order to properly size the volume of the system vessels (high pressure receiver and low pressure accumulator), an estimate of the refrigerant charge held in the evaporators must be made. Designers normally calculate the evaporator charge as a percentage of the evaporator internal volume times the liquid density of ammonia.

One of the main advantages of DX operation is the significantly reduced evaporator ammonia charge compared to pumped ammonia. Many system designers estimate evaporator charge for bottom feed pumped ammonia evaporators to be as much as 80% of the internal volume times the liquid density to account for low load and idle conditions. DX ammonia evaporator charge can be estimated using two phase void fraction equations. Table 11 below shows DX ammonia evaporator charge as a percentage of internal volume.

© 2016 Colmac Coil Manufacturing Inc.

TABLE 11
COLMAC DX AMMONIA CHARGE INVENTORY

Suction Pressure, psia (Saturation Temp, F)	Colmac DX Ammonia Evaporator Charge Inventory, lbs/ft3 of Internal Volume
48.2 (+20 F)	1.01
30.4 (0 F)	0.83
18.3 (-20 F)	0.63
10.4 (-40 F)	0.52

This significantly reduced system charge not only reduces the required size of the receiver (and/or other system vessels), it also greatly reduces pump out time for the evaporators prior to defrosting. This serves to shorten total defrost time and increase the effectiveness of hot gas defrosting, reducing energy consumption and operating costs.

EXAMPLE:
A Colmac DX ammonia evaporator operating at a suction temperature of -20 deg F has an internal volume of 12 ft3. What is the expected DX ammonia operating charge? What would the operating charge be for pumped ammonia operation using the “80%” rule?

Answer:
Colmac DX ammonia charge = 12 ft3 x 0.63 = 7.6 lbs
Pumped ammonia charge = 12 ft3 x 0.8 x 42.2 lbs/ft3 = 405 lbs

XV. Optimizing Hot Gas Defrost

The energy efficiency of hot gas defrosting evaporators depends on the following (Nelson 2011(1)):

1. Minimizing convective heat loss.
    - Use lowest practical defrost regulator setting. 75 to 90 psig (50 to 60F) should be adequate. Note: If higher pressures are needed, look for problems elsewhere.
2. Shorten defrost duration.
    - Use top feed or DX (direct expansion) evaporator feed to reduce time required for pump out.
    - Open the hot gas solenoid only long enough to clear coil (6-8 minutes).
    - Install a separate hot gas solenoid and defrost regulator for pre and post-heating of the pan loop. Alternately, install electric resistance drainpan heating.
3. Reduce the number of defrosts per day.
    - Reduce the number of defrosts per day to match the frost load.
    - Choose evaporators with wide fin spacing (3 fpi instead of 4 fpi) to maximize frost carrying capacity.

© 2016 Colmac Coil Manufacturing Inc.

- Mitigate infiltration of humid air into the refrigerated space by:
  - Proper design and operation of doorways, and
  - Keep loading docks at the lowest practical dewpoint temperature.

Calculating the Cost of Defrost

As mentioned above defrost efficiency can be significantly improved by reducing the amount of energy lost to the room by convection during defrost. The operating cost savings due to a reduction in defrost duration has been calculated and presented below based on:

1. Reducing defrost duration from 30 minutes to 10 minutes, and
2. Increasing frost thickness from 1mm to 2mm (reducing the number of defrosts per day by half).

The calculations assume:

- Evaporator capacity: 100 TR
- Compressor runtime: 16 h/day
- Cost of Electricity: $0.10/kWh

Table 12 shows calculated cost savings for four different room temperatures.

TABLE 12
CALCULATED COST SAVINGS ($/y/100 TR) FOR OPTIMIZED VS CONVENTIONAL DEFROST

	Room Temp, C (F)			
	0 (+32)	**-18 (0)**	**-23 (-10)**	**-34 (-30)**
SHR	0.66	0.89	0.93	0.97
System COP:	3.2	2.5	2.2	2
Frost Removed, kg/day:	2,778	899	572	245
Frost Removed, kg/y:	1,014,096	328,090	208,784	89,479
I. Baseline (30 min, 1 mm)				
Defrost Efficiency, %	32%	18%	17%	14%
Defrost Convective Losses, %:	46%	61%	63%	65%
Defrost Convective Losses, kWh/y:	1,012,438	753,334	545,922	283,071
Baseline Cost of Defrost (Convective), $/y:	**$31,639**	**$30,133**	**$24,815**	**$14,154**
II. Optimized (10 min, 2 mm)				
Defrost Efficiency, %	61%	46%	43%	40%
Defrost Convective Losses, %:	15%	26%	27%	30%
Defrost Convective Losses, kWh/y:	168,740	125,556	90,987	47,178
Optimized Cost of Defrost (Convective), $/y:	**$5,273**	**$5,022**	**$4,136**	**$2,359**
Savings Optimized vs Baseline, $/y:	**$26,366**	**$25,111**	**$20,679**	**$11,795**

© 2016 Colmac Coil Manufacturing Inc.

Conventional ammonia evaporators are typically arranged for bottom feed with the hot gas pan loop piped in series with the coil. The highest possible defrost efficiency and lowest operating cost can be achieved by utilizing top feed DX circuiting with the hot gas pan loop piped separately from the coil. This results in:

- Shorter pump out period
- Defrost duration (time coil hot gas solenoid is open) of only 6-8 minutes

With a conventional bottom feed and hot gas defrost piping arrangement, hot gas is first sent through the drainpan loop and then in series through the coil block. This commonly used arrangement is effective and simple, however, it requires that the hot gas solenoid remains open to keep the drainpan heated long enough for all water to completely drain and exit through the drain piping. Convective heat loss to the room continues after the coil is clear of frost while the pan is draining.

A more efficient arrangement is to control hot gas to the coil block and to the drainpan loop separately through two separately timed hot gas solenoid valves. This arrangement shortens the amount of time hot gas is flowing through the coil block, minimizing the convective heat loss and maximizing defrost efficiency.

Diversity and Defrost Timing

As with all hot gas defrost systems, the “two to one” rule must be observed in the execution of defrosts. That is, a minimum of two evaporators in the same temperature zone must be running (liquid line solenoids open) at the same time one evaporator is defrosting. This strategy is needed to provide enough load to balance evaporating to condensing (defrosting) capacity in the refrigeration system.

XVI. Defrost Water Volume and Drain Line Sizing

Following is a simple method to calculate the amount of moisture removed by the air coolers from air in the refrigerated spaces in order to determine:

A) Total sewerage requirements for the facility, and
B) Proper drain piping sizes to handle peak flowrates during defrost.

This section will present two simple calculation methods for determining these important design parameters (Nelson 2008).

Determining Total Volume of Moisture Removed:

In order to estimate the volume of water generated from defrosting (or wet fin) air coolers, the hours per day the cooler(s) operate along with the Sensible Heat Ratio (SHR) must be known. Assuming a room relative humidity of 90%, the SHR for an air cooler operating at various temperatures will be as shown in Table 13 below.

© 2016 Colmac Coil Manufacturing Inc.

TABLE 13
SHR FOR 90%RH AIR AT VARIOUS TEMPERATURES

Room Temp, F	Air SHR
45	0.59
32	0.70
10	0.85
-10	0.93
-30	0.98

The amount of moisture accumulated on the surfaces of the air cooler(s) that will be drained as condensed water in high temp rooms or as melted frost in medium and low temp rooms, can be estimated using the following formula:

$$Gal/day = 1.35t(1 - SHR)Q \qquad (9)$$

where:
t = Operating Time, hours/day
SHR = Air Sensible Heat Ratio
Q = System Cooling Capacity, tons (note: 1 ton = 12,000 Btuh)
1.35 (constant) = 12,000 Btuh/ton / (8.33 lbs/gal x 1,068 Btu/lbs)
8.33 lbs/gal = liquid density of water
1,068 Btu/lbs = latent heat of vaporization of water

Example 1:
Room Temp: 45F
Operating Time: 12 hours/day
Room SHR (from Table 1): 0.59
System Cooling Capacity: 50 tons
Condensed Water Volume = 1.35 x 12 x (1-.59) x 50 = 332 gal/day

Example 2:
Room Temp: -10F
Operating Time: 16 hours/day
Room SHR (from Table 1): 0.93
System Cooling Capacity: 100 tons
Defrost Water Volume = 1.35 x 16 x (1 - 0.93) x 100 = 151 gal/day

Determining Peak Defrost Water Flowrate

To determine the peak defrost water flowrate leaving a frosted coil surface, first calculate the volume of water yielded by a cooling coil during defrost using the following equation:

© 2016 Colmac Coil Manufacturing Inc.

$$V_{def} = 0.0937 \times A_{surf} \times \left[\frac{\left(\frac{1}{S_{fin}} - t_{fin} \right)}{2} \right] \times \varepsilon \qquad (10)$$

where:

$V_{def} =$ *Volume of Defrost Water, gallons*

$A_{surf} =$ *Total Frosted Surface Area, sq ft*

$S_{fin} =$ *Fin Spacing, fins per inch*

$t_{fin} =$ *Fin Thickness, inches*

$\varepsilon =$ *Fraction of Frost Blockage (50% = 1.5)*

Note: This equation assumes frost has average density of 150 kg/m3 (Besant 1999), approx. 1/6th that of liquid water.

Example 1:

Total Surface Area = 4,500 sq ft
Fin Spacing = 4 fins per inch
Fin Thickness = 0.012 inches
Fraction of Frost Blockage = 0.5
Volume of Defrost Water = 0.0937 x 4,500 x (1/4-0.012)/2 x 0.5 = 25 gallons

In order to then determine the peak flowrate, an estimate of the length of defrost time must be made. For hot gas defrosting, the majority of defrost water flows to the drain in a relatively short period of time. To estimate peak flow rate of defrost water an estimated duration of defrost of 5 minutes can reasonably be made (Stoecker 1983).

To calculate peak flowrate, simply divide the volume of defrost water by the estimated duration of defrost. For the example:

Estimated peak defrost flowrate = 25 gal/ 5 min = 5 gpm

Drain lines can now be sized based on the calculated peak defrost flowrate. The maximum peak flowrate for a facility will be the combined flowrates for the maximum number of cooling coils expected to defrost simultaneously.

Colmac provides to its representatives and selected customers a calculation tool for estimating defrost flow rate given operating temperatures and evaporator dimensional data.

© 2016 Colmac Coil Manufacturing Inc.

Sizing Sloping Drain Lines

The American Society of Plumbing Engineers (ASPE) publishes sizing methods for vertical and sloping drains (ASPE 1999). The following table is taken from the ASPE Data Book Volume 2, page 8.

TABLE 14
APPROXIMATE DISCHARGE RATES AND VELOCITIES IN SLOPING DRAINS, N = 0.015*

Actual Inside Diameter of Pipe, inches	½-Full Flow Discharge Rate and Velocity Based on ¼ inch/ft Slope	
	Discharge, gpm	Velocity, fps
1 3/8	3.13	1.34
1 ½	3.91	1.42
1 5/8	4.81	1.50
2	8.42	1.72
2 ½	15.3	1.99
3	24.8	2.25
4	53.4	2.73
5	96.6	3.16
6	157	3.57
8	340	4.34
10	616	5.04
12	999	5.67

* n = Manning coefficient, which varies with the roughness of the pipe.

Horizontal drain lines must be pitched at least ¼” per foot to ensure positive drainage.

Drain lines running through freezing spaces should be actively heated with heat trace cable and then well insulated.

Drain lines should also have p-traps installed just outside the refrigerated space to prevent back flow of warm humid ambient air through the drain line into the refrigerated space.

© 2016 Colmac Coil Manufacturing Inc.

XVII. References

Briley, G.C. 1984. "Lubricant (Oil) Separation". International Institute of Ammonia Refrigeration, Alexandria, VA. Proceedings of the IIAR 1984 Annual Meeting, pp 107F-131F.

Cleland D.J., O'Hagan A.N. 2002. "Performance of an Air Cooling Coil Under Frosting Conditions". American Society of Heating, Refrigerating and Air-Conditioning Engineers. ASHRAE Transactions 2002 V. 109, Pt. 1

Cleland, D.J. 2012. "The Effect of Water Vapour on Food Refrigeration Systems". The Institute of Refrigeration. London, UK. Proc. Inst. R. 2011-12. 5.

Davis, J.R., 1999, "Corrosion of Aluminum and Aluminum Alloys", ASM Internaional, Materials Park, OH. Chap 2, pp 38.

IIAR 2004, "Ammonia Refrigeration Piping Handbook". International Institute of Ammonia Refrigeration. Alexandria, VA.

IIAR 2008, ANSI/IIAR 2-2008 "Equipment, Design, and Installation of Closed-Circuit Ammonia Mechanical Refrigerating Systems", International Institute of Ammonia Refrigeration. Alexandria, VA.

Jensen, S. 2013. Personal correspondence.

LaRoche Industries, 1987, "Aqua Ammonia Information Manual", LaRoche Industries Inc. Concord, NC.

LaRoche Industries, 1998, "Material Safety Data Sheet #4003 (Ammonium Hydroxide)", LaRoche Industries Inc. Concord, NC.

Nelson, B.I., 2008, "Determining Defrost Water Volume". Technical Bulletin. Colmac Coil Manufacturing, Inc. Colville, WA.

Nelson, B.I., 2010, "Thermodynamic Effects of Water in Ammonia on Evaporator Performance", International Institute of Ammonia Refrigeration, Alexandria, VA. Proceedings of the IIAR 2010 Annual Meeting, pp 201-236.

Nelson, B.I., 2011, U.S. Patent 7,958,738, "Direct Expansion Ammonia Refrigeration System and a Method of Direct Expansion Ammonia Refrigeration".

Nelson, B.I., 2011(1), "Optimizing Hot Gas Defrost". Technical Bulletin. Colmac Coil Manufacturing, Inc. Colville, WA.

Nelson, B.I., 2011(2), "Colmac Introduces DX Ammonia with Smart Hot Gas 'SHG' Defrost". Technical Bulletin. Colmac Coil Manufacturing, Inc. Colville, WA.

© 2016 Colmac Coil Manufacturing Inc.

Nelson, B.I., 2012(a), “Comparing Air Cooler Ratings – Part 1: Not All Rating Methods are Created Equal”. Technical Bulletin. Colmac Coil Manufacturing, Inc. Colville, WA.

Nelson, B.I., 2012(b), “Comparing Air Cooler Ratings – Part 2: Why DTM Ratings Cost You Money”. Technical Bulletin. Colmac Coil Manufacturing, Inc. Colville, WA.

Nelson, B.I., 2015, “Optimizing Evaporator Runtime and Defrost Frequency", International Institute of Ammonia Refrigeration, Alexandria, VA. Proceedings of the IIAR 2015 Annual Meeting, TP#4.

Smith, E. 2010, “Technical Note”. International Institute of Ammonia Refrigeration (IIAR). Alexandria, VA. Condenser Magazine August 2010.

Stoecker, W.F. 1988, “Industrial Refrigeration Handbook”, Business News Publishing Company, Michigan.

Tanner Industries, 2000, “Material Safety Data Sheet (Ammonium Hydroxide)”, Tanner Industries, Inc. Southampton, PA.

Welch, J. 2013. Personal correspondence.

Wiencke, B. 2002, “Sizing and Design of Gravity Liquid Separators in Industrial Refrigeration”, International Institute of Ammonia Refrigeration, Alexandria, VA. Proceedings of the IIAR 2002 Annual Meeting, pp 63-133.

Wiencke, B. 2012. Personal correspondence.

Wierbosch, M. and Sandler, M. 2010, “Base Fluid Effect on Performance in an Ammonia Refrigeration System”. RM-Support BV. Henglelo, NL.

© 2016 Colmac Coil Manufacturing Inc.

XVIII. APPENDIX A

Four P&ID diagrams are shown representing:

Figure A1 – Single Stage Single (or Multiple) Temperatures
Figure A2 – Single Stage Multiple Temperatures
Figure A3 – Single Stage Low Temp < -20 deg F
Figure A4 – Single Stage Glycol Med Temp / DX Low Temp
Figure A5 - Two Stage (Screw Compressors) with Intercooling
Figure A6 - Two Stage (Recip Compressors) with Intercooling

© 2016 Colmac Coil Manufacturing Inc.

FIGURE A1

SINGLE STAGE SCREW COMPRESSOR(S) W/LIQUID INJECTION OIL COOLING

SINGLE (OR MULTIPLE) TEMPERATURE LEVELS

MAX NO. OF HG DEFROSTS PER DAY = 6

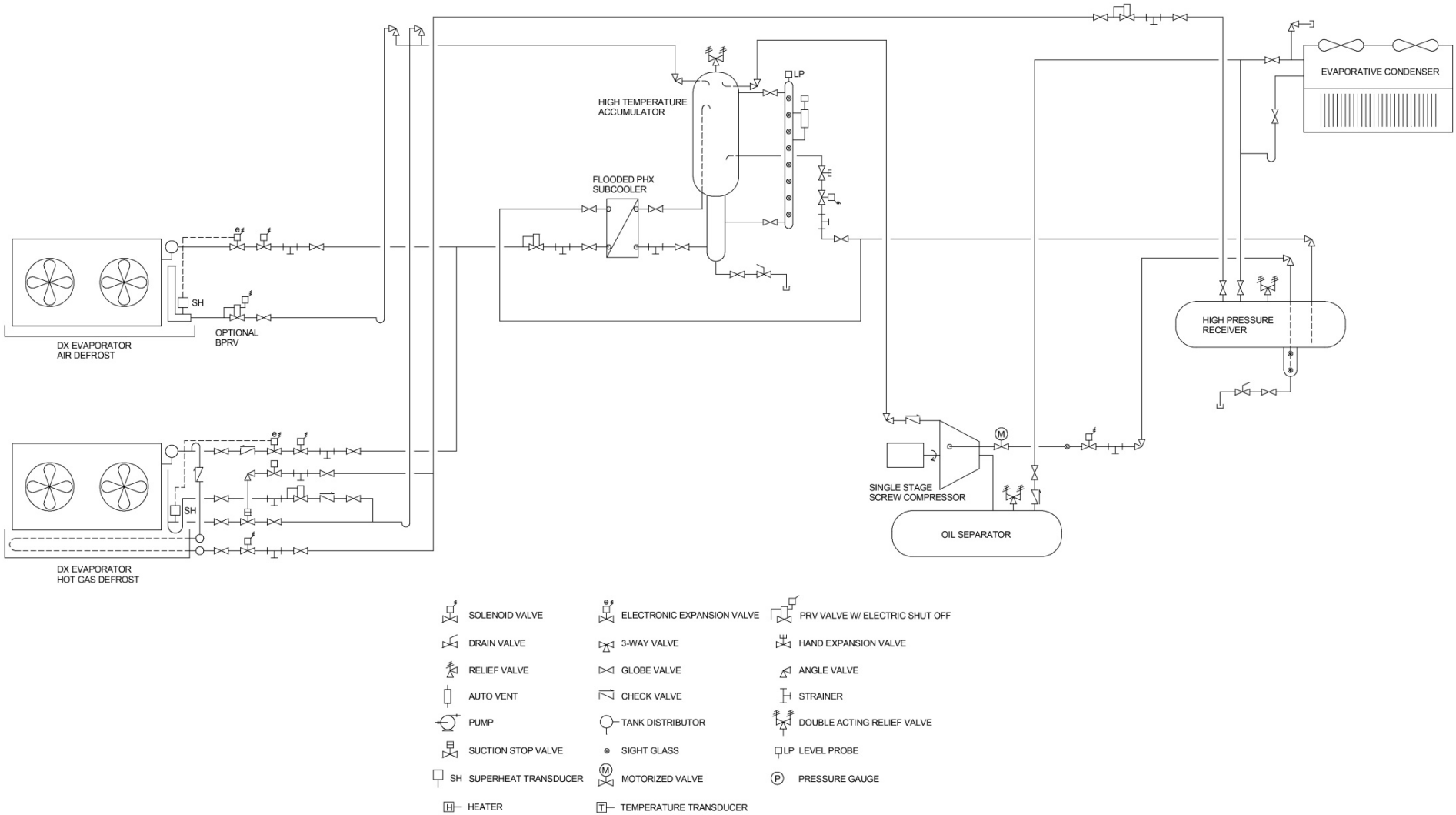

©2016 COLMAC COIL MANUFACTURING INC.

FIGURE A2

SINGLE STAGE ECONOMIZED SCREW COMPRESSOR(S) W/LIQUID INJECTION OIL COOLING

MULTIPLE TEMPERATURE LEVELS (Te > - 20 F)

MAX NO. OF MED TEMP HG DEFROSTS PER DAY = 6

MAX NO. OF LOW TEMP HG DEFROSTS PER DAY = 2

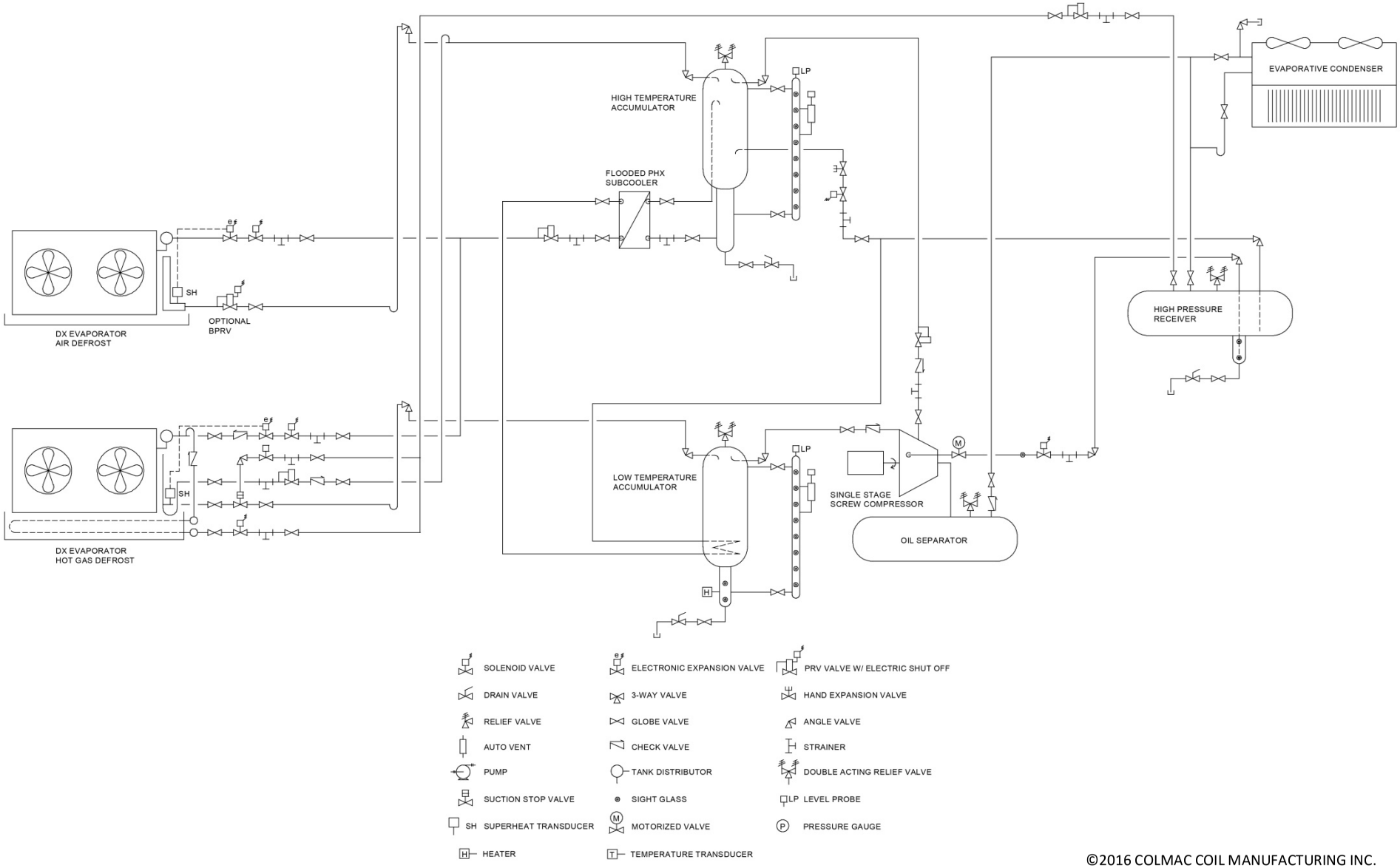

©2016 COLMAC COIL MANUFACTURING INC.

FIGURE A3

SINGLE STAGE ECONOMIZED SCREW COMPRESSOR(S) W/LIQUID INJECTION OIL COOLING
MULTIPLE TEMPERATURE LEVELS

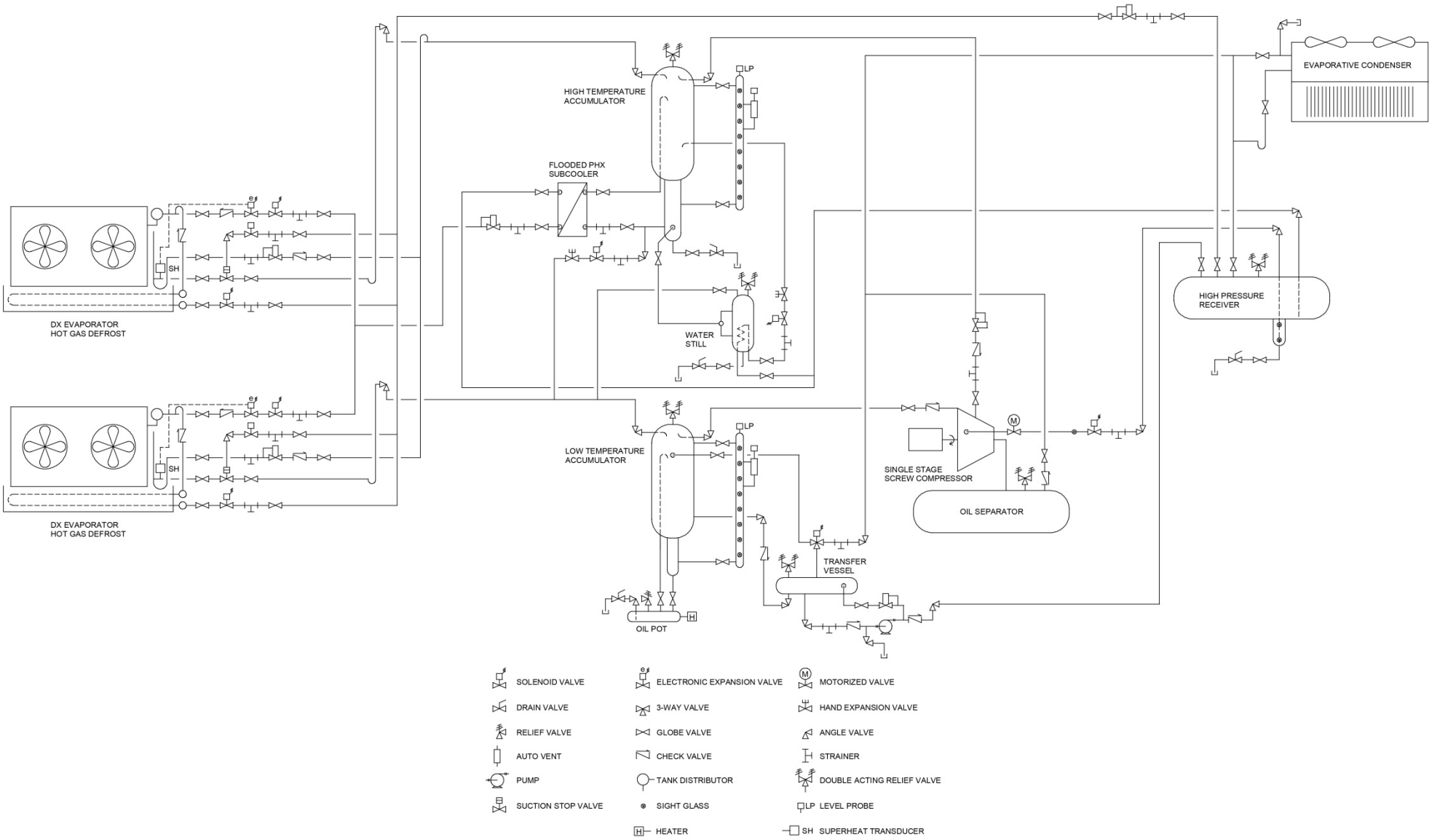

©2016 COLMAC COIL MANUFACTURING INC.

FIGURE A4

SINGLE STAGE ECONOMIZED SCREW COMPRESSOR(S) W/GLYCOL OIL COOLING
WATER COOLED CONDENSING
GLYCOL MEDIUM TEMPERATURE/DX LOW TEMPERATURE

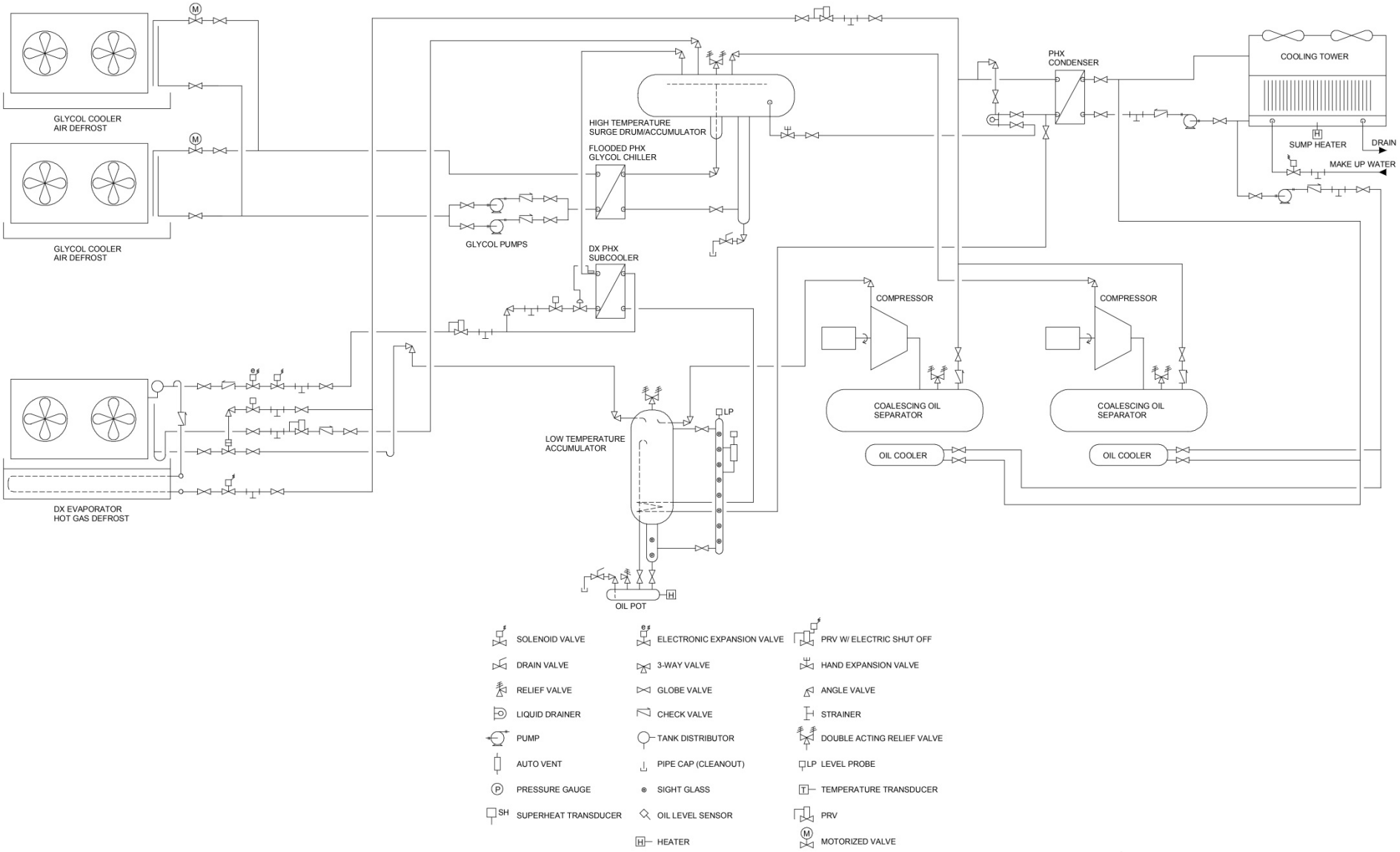

©2016 COLMAC COIL MANUFACTURING INC.

FIGURE A5

TWO STAGE SCREW COMPRESSOR(S) W/GLYCOL OIL COOLING
HIGH TEMP ACCUMULATOR/FLASH INTERCOOLER
PILOT HP RECEIVER W/HIGH SIDE FLOAT VALVE

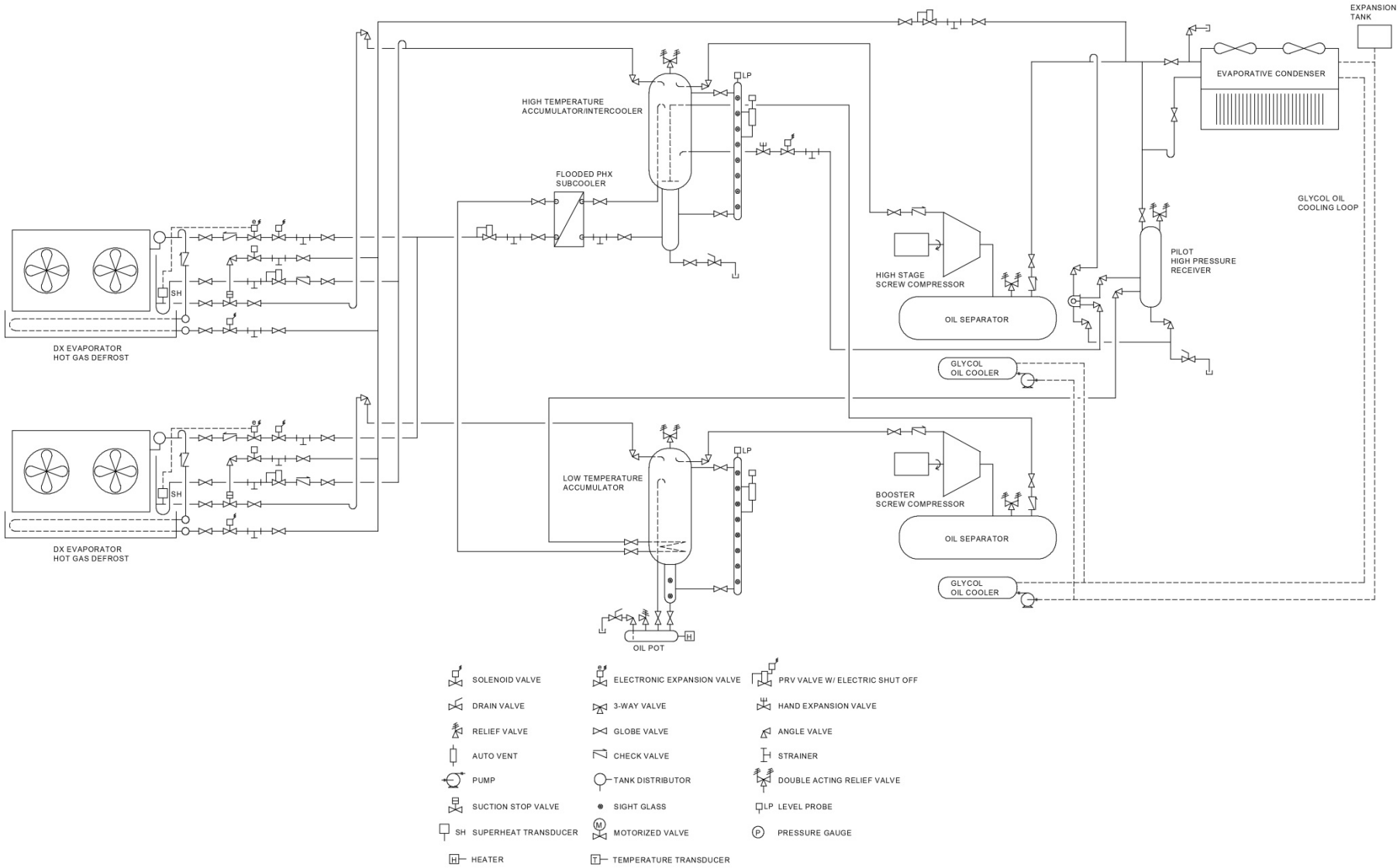

©2016 COLMAC COIL MANUFACTURING INC.

FIGURE A6

TWO STAGE W/RECIP COMPRESSORS
HIGH TEMP ACCUMULATOR/FLASH INTERCOOLER
PILOT HP RECEIVER W/HIGH SIDE FLOAT VALVE

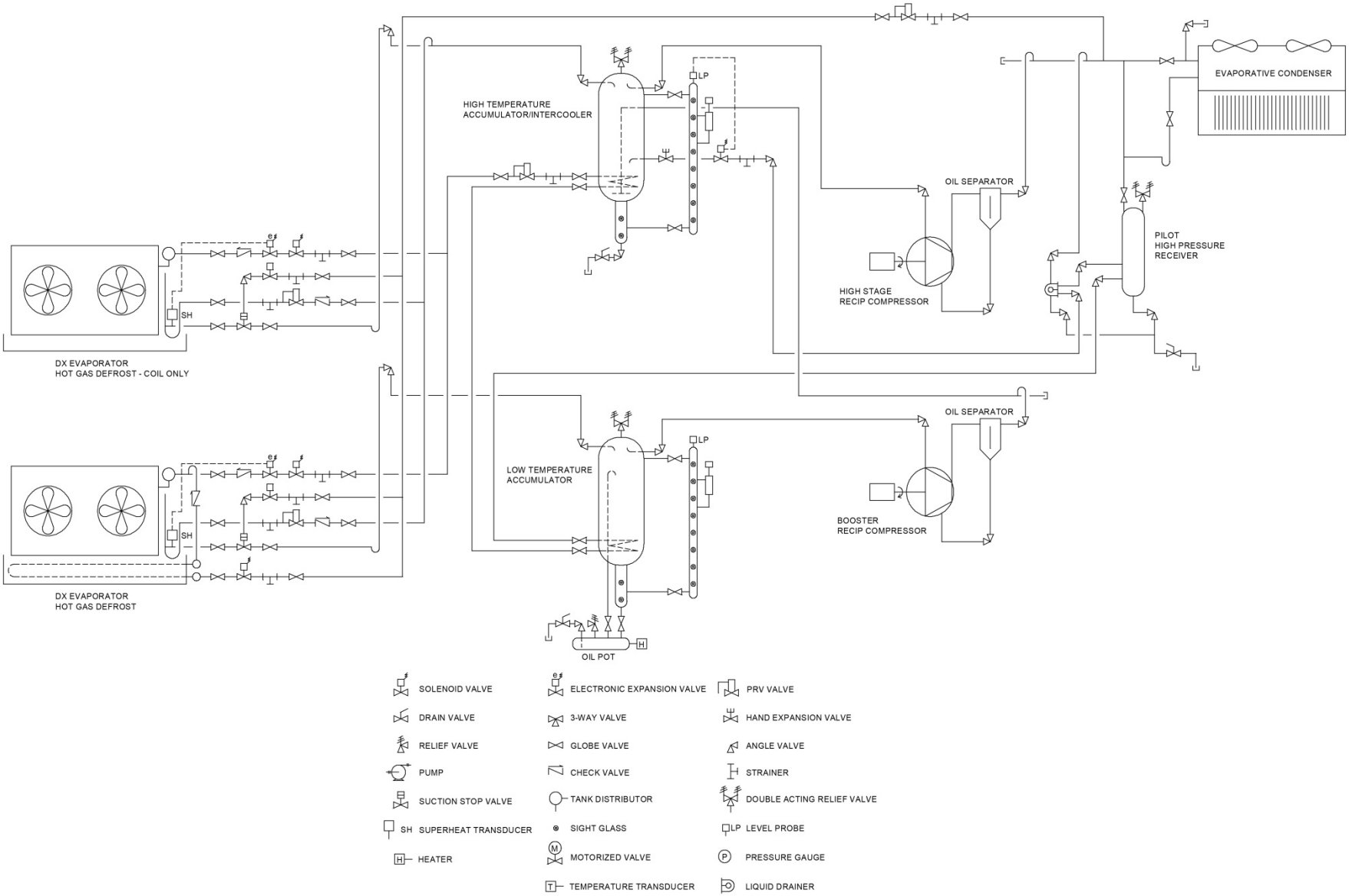

©2016 COLMAC COIL MANUFACTURING INC.

For more information contact Colmac Coil Manufacturing, Inc.

PO Box 571 | Colville, WA 99114
+1.800.845.6778 | +1.509.684.2595
mail@colmaccoil.com | www.colmaccoil.com

©2016 Colmac Coil Manufacturing, Inc.